ALIA BOILING & CHILLED WATER SYSTEM
CABINET DIMENSIONS

FOR MODELS:

AG-CS101BG, AG-CS101NI, AG-CS101MB,
AG-CS101GM, AG-CS101CH, AG-CS101MW

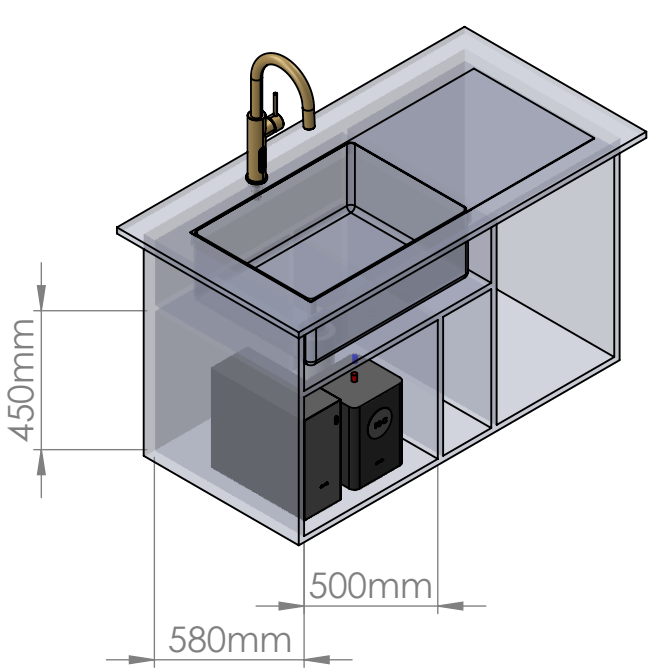

ISOMETRIC VIEW

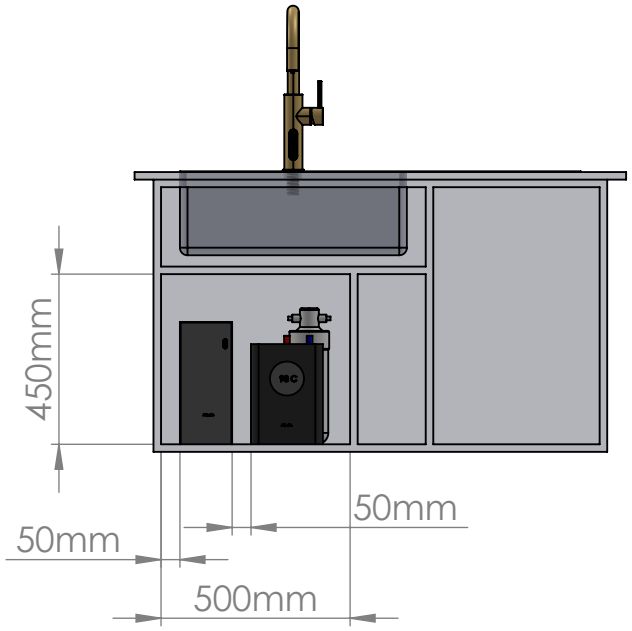

FRONT VIEW

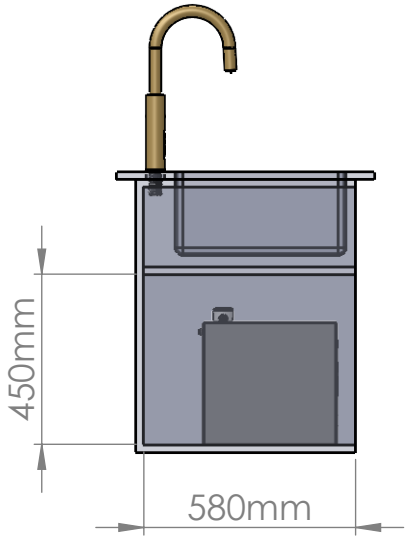

SIDE VIEW

REVISION 2