Serenity Progressive Shower System And Serenity Hand Shower Trim Kit Only

Nero

Lead Free

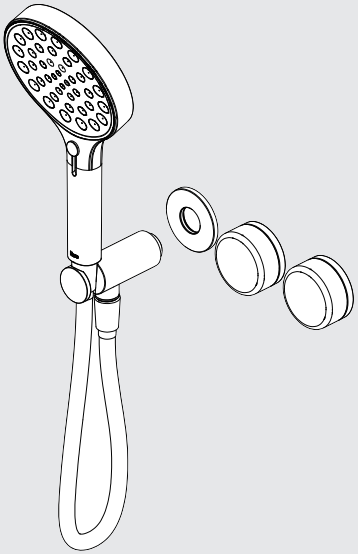

Versions:202506

Drawing

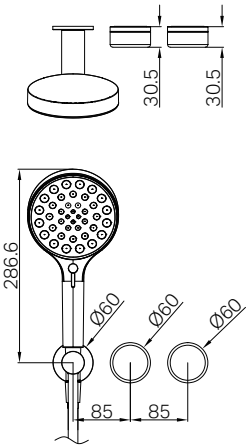

Specifications

Watermark License
WM-060073

Temperature Rating
Min 1˚C-Max 75˚C

Pressure Rating
Min 150kpa - Max 500kpa

Packaging Includes

2x Handwheels
1x Backplate
1x Hand Shower
(Built-In Check Valve)
1x Bracket
1x 1m PVC Hose

*Dimensions are nominal measurements only.
**Dual-check valve pre-installed.

Finish & SKU

Chrome

Gun Metal

Brushed Bronze

Matte Black

Brushed Gold

Brushed Nickel

Serenity Progressive Shower System With Carrara Handle And Serenity Hand Shower Trim Kit Only

24E097BZ/ 24E097BG / 24E097BN/24E097GM / 24E097MB / 24E097CH

Serenity Progressive Shower System With Verde Alpi Handle And Serenity Hand Shower Trim Kit Only

24E098BZ/ 24E098BG / 24E098BN/24E098GM / 24E098MB / 24E098CH

Serenity Progressive Shower System With Rome Travertine Handle And Serenity Hand Shower Trim Kit Only

24E099BZ/ 24E099BG / 24E099BN/24E099GM / 24E099MB / 24E099CH

Serenity Progressive Shower System With Arabescato Corchia Handle And Serenity Hand Shower Trim Kit Only

24E100BZ/ 24E100BG / 24E100BN/24E100GM / 24E100MB / 24E100CH

Serenity Progressive Shower System With Metal Handle And Serenity Hand Shower Trim Kit Only

24E102BZ/ 24E102BG / 24E102BN/24E102GM / 24E102MB / 24E102CH

Serenity Progressive Shower System With Marquina Black Handle And Serenity Hand Shower Trim Kit Only

24E124BZ/ 24E124BG / 24E124BN/24E124GM / 24E124MB / 24E124CH

Installation Instruction

GENERAL INSTRUCTIONS:

- This product must be installed by a licensed plumber. Ensure that the installation complies with the Australian/New Zealand Standard AS/NZS 3500.
- All pipework must be thoroughly flushed prior to the installation of the mixer. In-line filters must be fitted on both hot and cold supplies to prevent foreign particles from damaging the ceramic cartridge.
- All outlets used primarily for personal hygiene must deliver water at a safe temperature in accordance with regional regulations.

NOTE:

- Do not hydrostatic test the installation with this mixer installed. Damage to the ceramic cartridge may occur.
- Do not remove the ceramic cartridge from the mixer when installing.
- After installation, all connections must be checked for leaks.
- This mixer is not recommended for use in uncontrolled heating systems such as wet-backs or solar heating units unless a suitable tempering valve is fitted.
- If limited water flow is experienced, locate aerator and filter washers and clean away foreign material as required.
- It is the responsibility of the plumber to ensure a waterproof seal is achieved between the product and mounting surface. If in doubt about the quality of the seal, remove the product and reinstall.
- The marble stone hand wheel crafted from natural marble. Each handle boasts unique variations in color, veining, and texture, making every piece one of a kind.

MAINTENANCE AND CARE:

- Regularly check the mixer and connections for signs of wear or leaks.
- Clean the tap with mild soapy water to maintain its appearance, avoiding harsh chemicals and abrasive materials that may damage the finish.
- Avoid contact with highly pigmented substances such as red wine, coffee and ink, as they may cause permanent staining.

FINAL INSPECTION:

- Ensure the tap operates smoothly and that there are no leaks at the connections.
- Clean the area and the newly installed tap with a soft cloth to remove any installation residues.

Installation Instruction

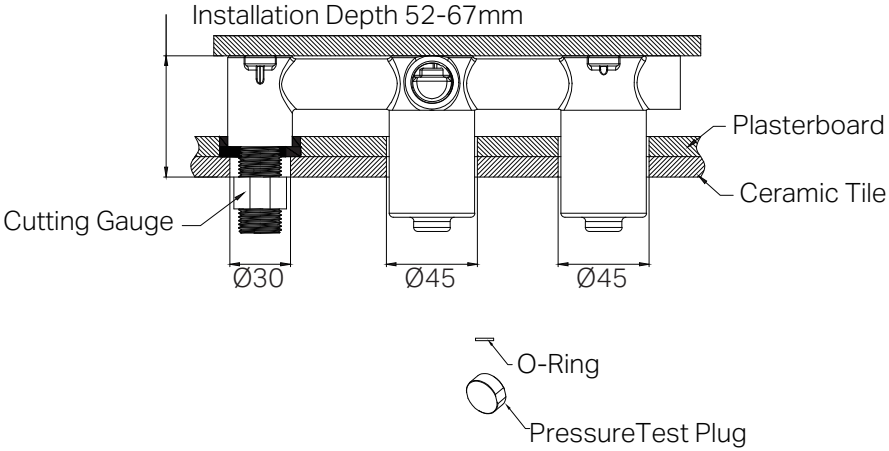

1. Drill two Ø45mm and a Ø30mm holes in the ceramic tile, then position it as shown in the above image.
2. Release the pressure test plug and O-ring and attach the cutting gauge to the G1/2 outlet.

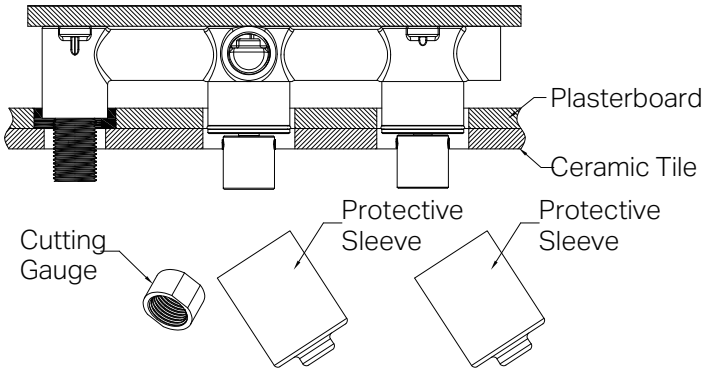

3. Trim any excess thread, and then remove the cutting gauge and protective sleeves.

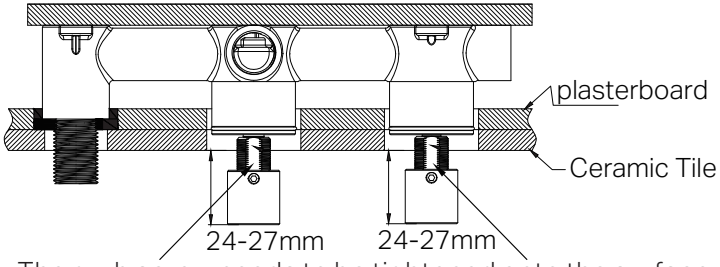

The grub screw needs to be tightened onto the surface.

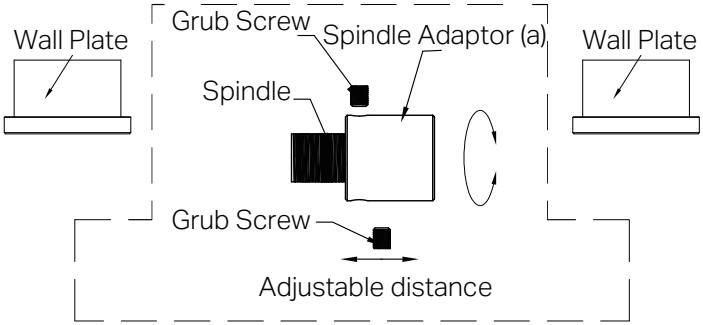

4. Adjust the two spindle adaptor (a) to the optimal length, ensuring a distance of 24-27 mm from the tile surface, as shown in the diagram.
5. Loosen the grub screws to make the adjustment.
Install each wall plates securely onto the mixer body.

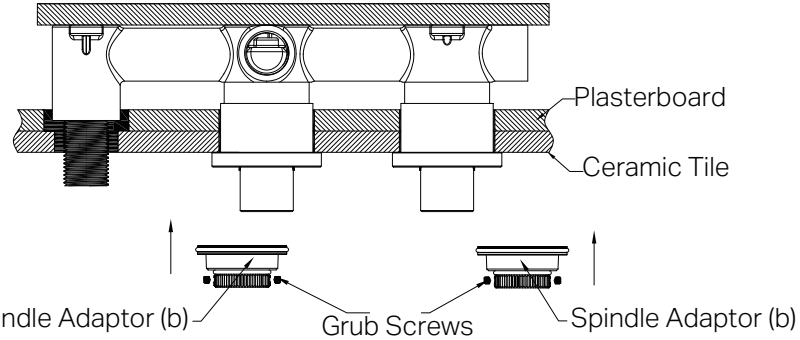

6. Use silicone sealant to seal the gap between the tile, wall plates and the G1/2 outlet.
7. Attach the two spindle adaptors (b) to the two spindle adaptors (a) and tighten the grub screws firmly to secure it.

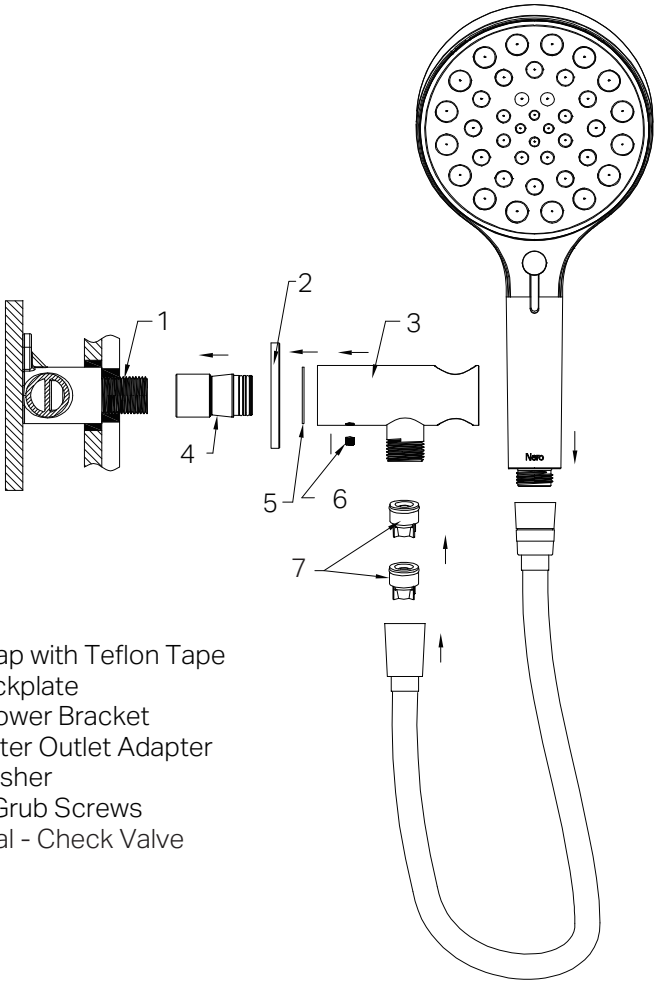

1. Wrap with Teflon Tape
2. Backplate
3. Shower Bracket
4. Water Outlet Adapter
5. Washer
6. 2xGrub Screws
7. Dual - Check Valve

8.Thread the water outlet adapter onto the G1/2 outlet and seal with Teflon tape.
9. Assemble the backplate, washer, and shower bracket onto the G1/2 outlet, then secure with two grub screws.
Note: Dual-check valve are pre-installed in the shower bracket.
10. Attach the shower hose to hand shower and shower bracket.

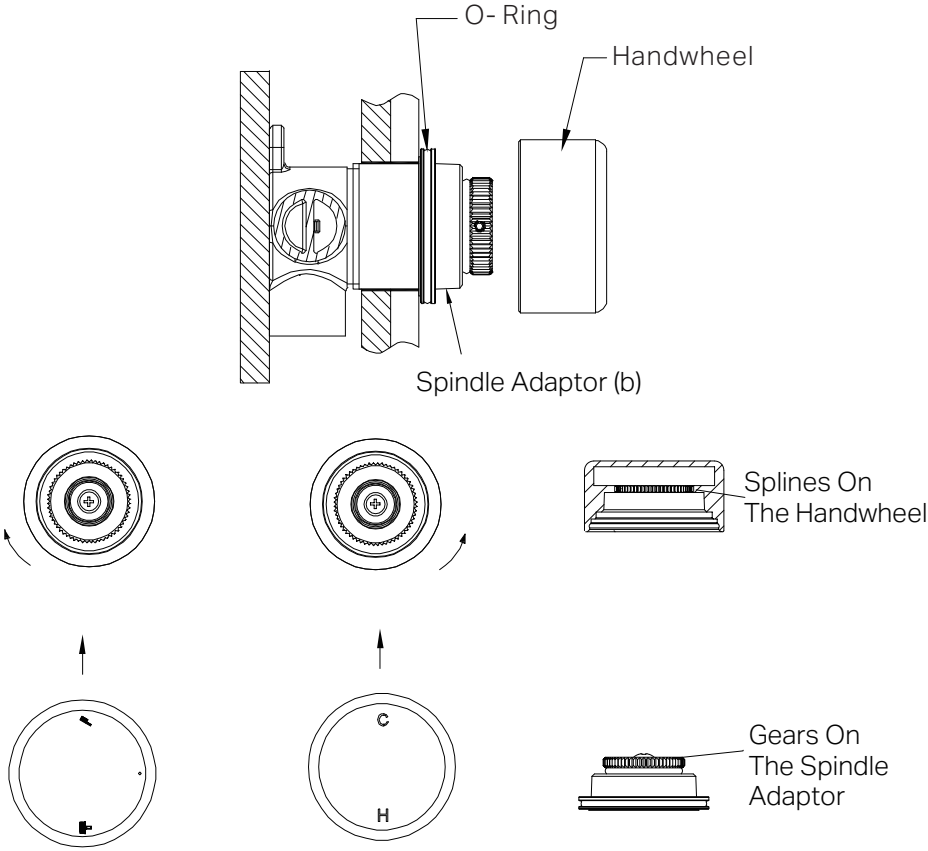

11. Apply lubrication evenly to the O-Ring. Refer to the diagram to identify the correct O-Ring position. Ensure the O-Ring is well-lubricated to prevent damage during installation.

For Metal Handwheels:

Rotate the right spindle adaptor (b) counterclockwise to its fully closed position.

Rotate the left spindle adaptor (b) clockwise to its fully closed position.

Refer to the diagram for clarification.

For Marble Handwheels:

No adjustment to the spindle adaptor (b) is necessary.

Align the Handwheels with the spindle adaptor (b):

Ensure the spline on the underside of the handwheels align perfectly with the gears on the spindle adaptor (b), as shown in the above diagram.

This alignment is crucial for proper functionality.

Secure the Handwheels:

Once aligned, press the handwheels down firmly onto the spindle adaptor (b).

Tip:

For metal handwheels, ensure the handwheels installed as shown in above on the diagram.

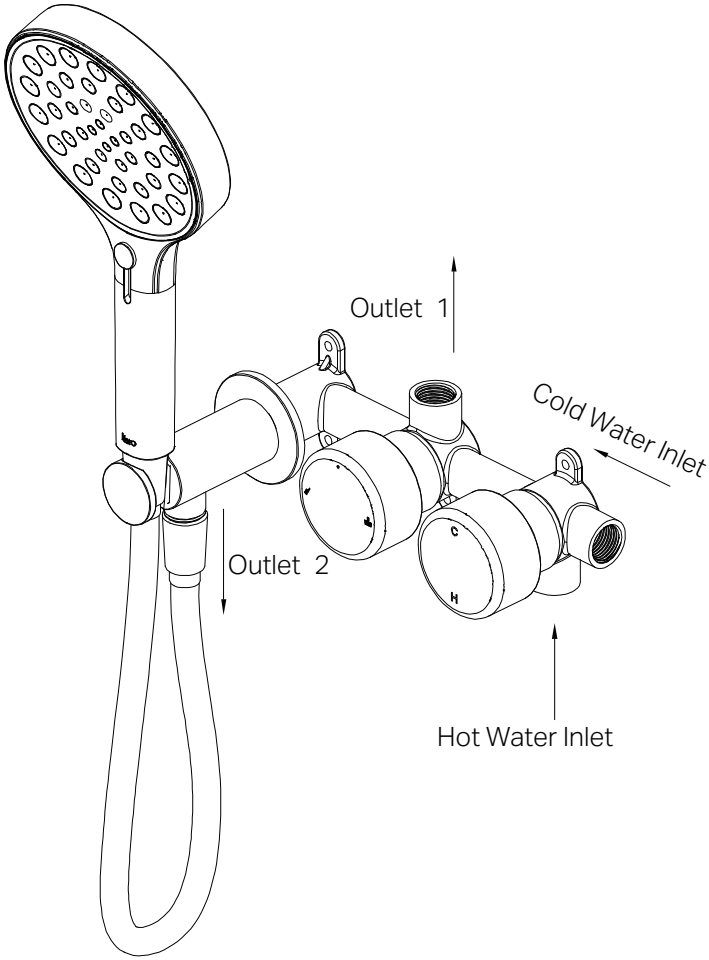

12. Turn on the drainage system and water supply, and inspect all connectionsfor any signs of leakage.
Note: If you bought marble handwheel product, there are no hot/cold markingsare applied to the handwheels.

3170875

Nero

Warranty Policy