Bianca Basin Mixer

Nero

Lead Free

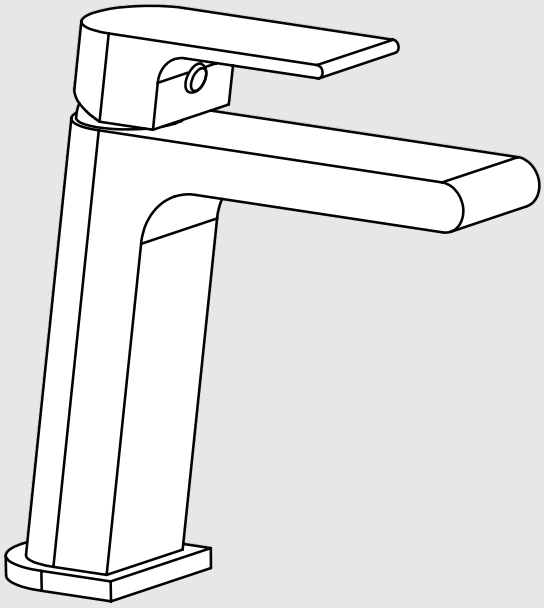

Versions:202506

Drawing

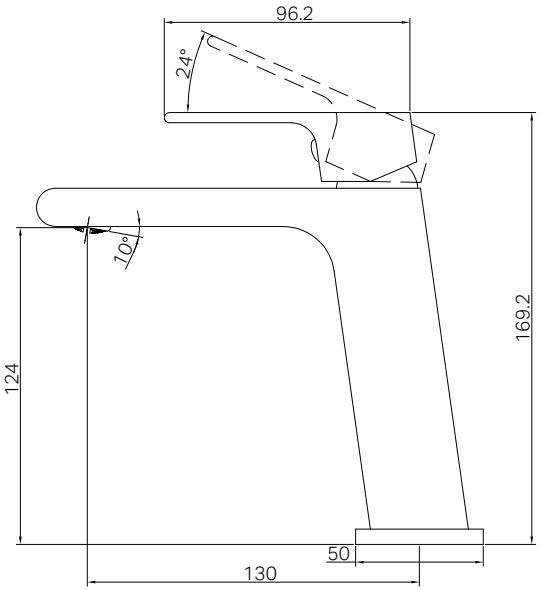

Specifications

Watermark License
WM-060073

Temperature Rating
Min 1˚C-Max 75˚C

Pressure Rating
Min 150kpa - Max 500kpa

Packaging Includes

1x Basin Mixer
2x Flexible Hoses
1x Installation Kits
1x Base Ring

Finish & SKU

Chrome NR321501CH	Gun Metal NR321501GM	Brushed Nickel NR321501BN
Matte Black NR321501MB	Brushed Gold NR321501BG	Brushed Bronze NR321501BZ

*Dimensions are nominal measurements only.

Installation Instruction

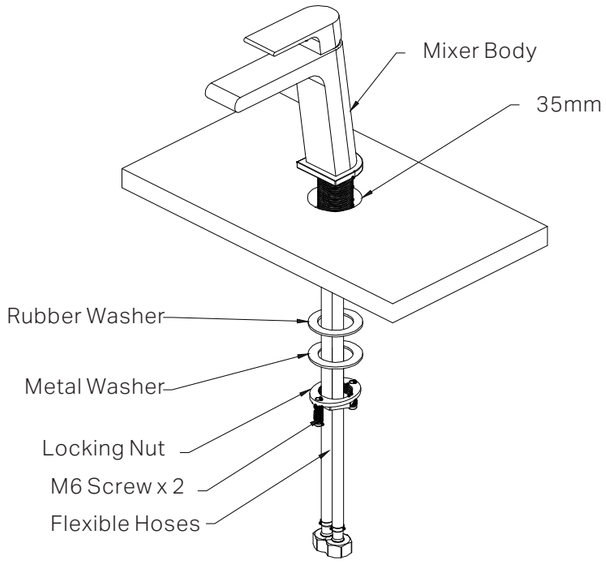

GENERAL INSTRUCTIONS:
- This product must be installed by a licensed plumber. Ensure that your plumbing installation conforms to the Australian/New Zealand Standard AS/NZS 3500.
- All pipework must be thoroughly flushed prior to the installation of the mixer. In-line filters must be fitted on both hot and cold supplies to prevent foreign particles from damaging the ceramic cartridge.
- All outlets used primarily for personal hygiene must deliver water at a safe temperature in accordance with regional regulations.

NOTE:
- Do not hydrostatic test the installation with this mixer installed. Damage to the ceramic cartridge may occur.
- Do not remove the ceramic cartridge from the mixer when installing.
- After installation, all connections must be checked for leaks.
- This mixer is not recommended for use in uncontrolled heating systems such as wet-backs or solar heating units unless a suitable tempering valve is fitted.
- If limited water flow is experienced, locate aerator and filter washers and clean away foreign material as required.
- It is the responsibility of the plumber to ensure a waterproof seal is achieved between the product and mounting surface. If in doubt about the quality of the seal, remove the product and reinstall.

MAINTENANCE AND CARE:
- Regularly check the mixer and connections for signs of wear or leaks.
- Clean the tap with mild soapy water to maintain its appearance, avoiding harsh chemicals and abrasive materials that may damage the finish.

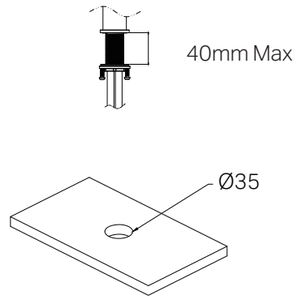

1. Pre-drill or create a hole with a diameter of 35mm at the proper location. Please note that the thickness of the surface should be between 3mm-40mm.

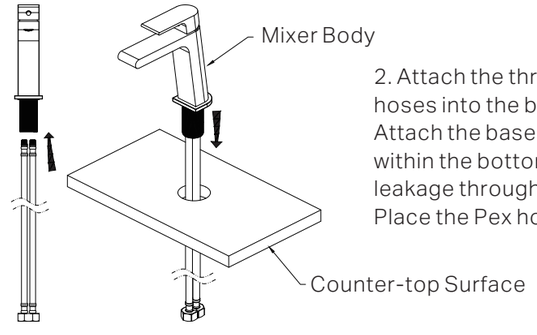

2. Attach the threaded tube to mixer body and screw the Pex hoses into the bottom of the mixer body.
Attach the base ring to the mixer body. Ensuring the O-ring sits within the bottom groove of the base plate to prevent water leakage through the cabinet.
Place the Pex hoses through hole in counter-top.

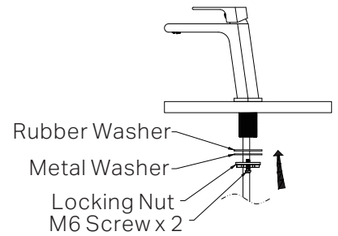

3. Install the rubber and metal washers, tighten the locking nut securely with the two M6 screws to ensure the mixer is firmly attached to the counter-top.
Avoid over tightening to prevent damage to the components.

4. Connect the Pex Hose to the corresponding hot and cold water supply valves. Tighten the Female cone nuts by hand(According to Pex hose instruction). Ensuring they are secure yet not overtightened to avoid thread damage.

5. Check all connections for leaks. If any fittings are leaking, shut off the water as necessary to stop the leaks. Contact the supplier for warranty claim. Refer to warranty page.

FINAL INSPECTION:
- Ensure the tap operates smoothly and that there are no leaks at the connections.
- Clean the area and the newly installed tap with a soft cloth to remove any installation residues.

3170052

Nero

Warranty Policy