Mecca 240V
7 Bar Heated Towel Ladder

Nero

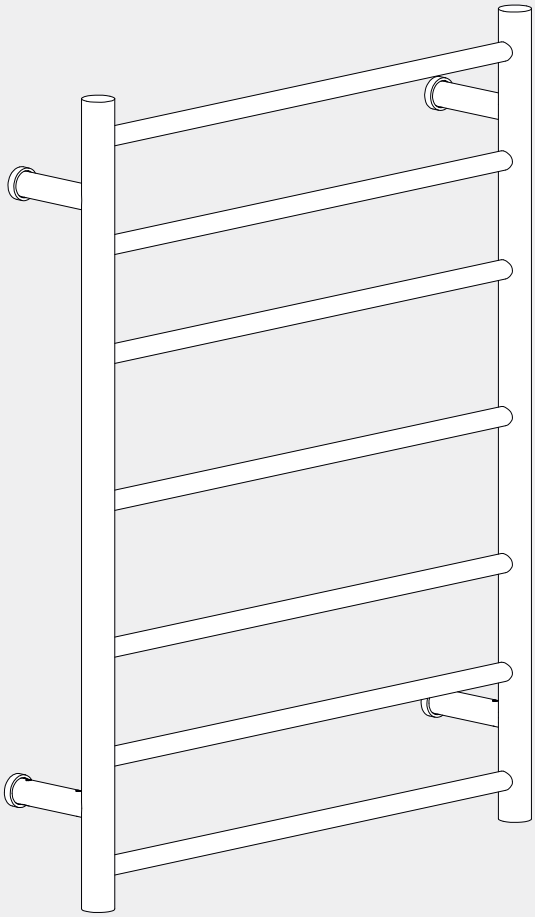

Version:202607

Drawing

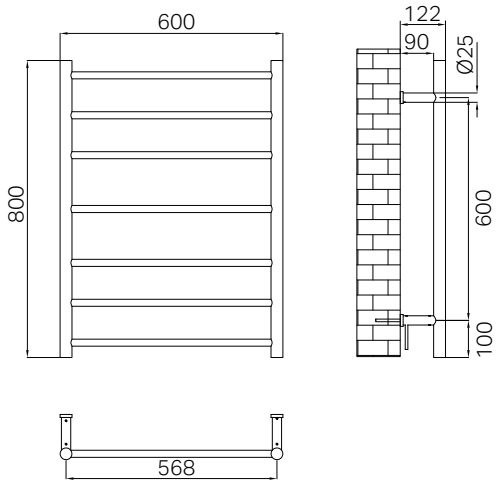

Specifications

Certification
SAA
Voltage
220-240V/50-60Hz
Power Rating
60W IP55
Appliance Class
Class I
Heat-up Time
20 Min

Packaging Includes

1x Heated Towel Ladder
(Including a 1.5m power cord)
1x Connection Wire Leg Kit

Finish & SKU

Chrome NR190003hCH
Matte Black NR190003hMB
Brushed Nickel NR190003hBN
Gun Metal NR190003hGM
Brushed Gold NR190003hBG
Brushed Bronze NR190003hBZ
Graphite NR190003hGR

*Dimensions are nominal measurements only.

SAFETY, INSTALLATION, AND CARE INFORMATION

SAFETY AND INSTALLATION:

- This 240V heated towel rail must be installed and tested by a qualified electrician in accordance with current local electrical and building regulations.
- It is essential that the towel rail is connected to a suitably rated Residual Current Device (RCD) circuit to enhance safety.
- In wet areas, strictly adhere to all electrical guidelines. Avoid installing the rail in locations subject to direct water spray or excessive moisture. It should not be mounted within the shower zone or immediately adjacent to bathtubs and sinks unless additional protective measures, such as splash guards, are implemented.
- When fixing to hollow walls, ensure that suitable anchors are used for a secure installation.
- Do not cover the towel rail with non-ventilating materials (e.g., plastic or waterproof covers), as this could lead to overheating and an increased fire risk.
- Regularly inspect the power cord for signs of damage. If any damage is detected, have the cord replaced immediately by an approved service agent or qualified professional.
- Do not use the towel rail to hang items contaminated with oil, petroleum-based products, or dry cleaning fluids, as these substances can elevate fire risks.
- Never immerse the towel rail in water or any other liquid.
- Ensure that the electrical supply is strictly 240V, 50Hz to avoid potential hazards.

WARNING:

- In order to avoid a hazard for very young children, this appliance shall be installed so that the lowest heated rail is at least 850 mm above the floor.
- This appliance is not intended for use by persons (including children) with reduced physical, sensory or mental capabilities, or lack of experience and knowledge, unless they have been given supervision or instruction concerning use of the appliance by a person responsible for their safety. Children should be supervised to ensure that they do not play with the appliance.
- This appliances is intended only for drying textiles washed in water. The appliance is only to be used with the unit provided.

CARE INFORMATION:

- Always disconnect the power before cleaning the towel rail.
- Clean the unit using a soft, damp cloth with a non-abrasive cleaning agent to preserve the finish. Avoid harsh scrubbing, acidic cleaners, or abrasive products that may damage the surface.
- Periodically check all mounting and electrical connections, and ensure that the unit is well-ventilated to maintain optimal performance and longevity.

NERO HEATED TOWEL RAIL/LADDER– 240V IP55 INSTALLATION GUIDE

This guide follows the AS/NZS 3000:2018 standard and outlines where a 240V IP55 heated towel rail/ladder can be safely installed in a bathroom.

Understanding IP Ratings

All electrical fixtures in bathrooms must meet certain Ingress Protection (IP) ratings to ensure safety.

- IP55 means:
  - "5" (Dust Protection) – Limited protection against dust; enough to prevent damage to internal components.
  - "5" (Water Protection) – Can withstand low-pressure water jets from any direction (equivalent to IPX5).

Installation Zones for 240V IP55 Heated Towel Rails/Ladders

Our 240V IP55 heated towel rail/ladder is suitable for installation outside Zone 1 in accordance with AS/NZS 3000:2018. Always check with a qualified electrician to ensure compliance with local regulations and site-specific conditions.

Important Safety Notes

- All electrical work must be performed by a licensed electrician.
- Hardwiring is required.
- All circuits must be protected by a 30mA RCD to ensure user safety.

For more details, please contact support@nerotapware.com.au or call +61 387863170

PARTS NAMES

① Towel Ladder x 1

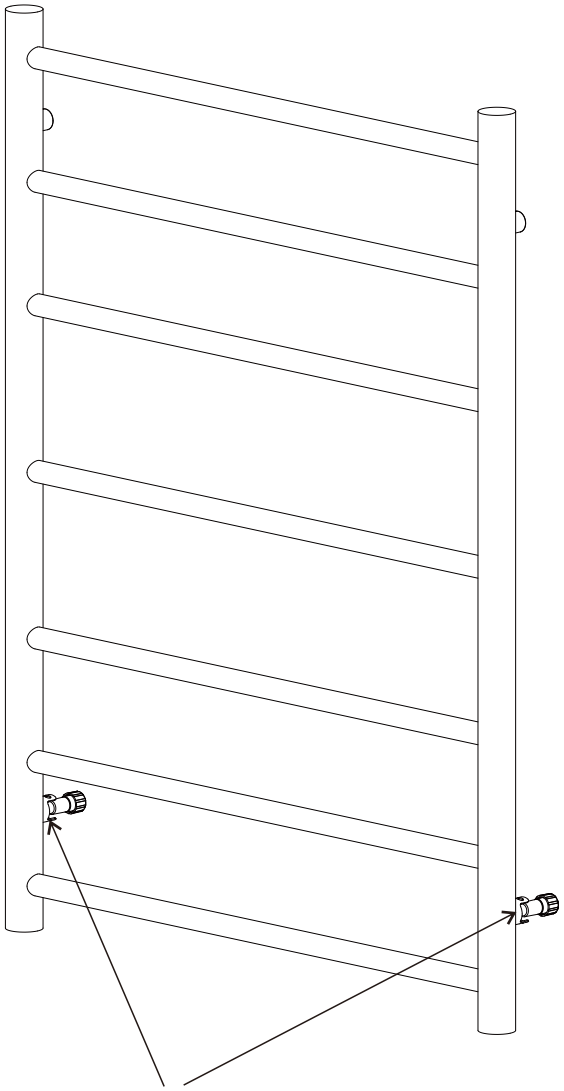

②Power Port x 2

③ Upper Support Leg x2

④ Open Support Leg x1

⑤ Lower Support Leg(concealed) x2

⑥ Mounting Bracket x3

⑦ Mounting Bracket x1

⑧ Expansion Screw x4

⑨ Expansion Plug(E type) x4

⑩ Grub Screw x8

⑪ Cross Recessed Pan Head Screw x2

⑫ Ball Head Allen Key x1

⑬ Power Cord With Australia Plug x1

⑭ Concealed Power Cord x1

INSTALLATION STEPS

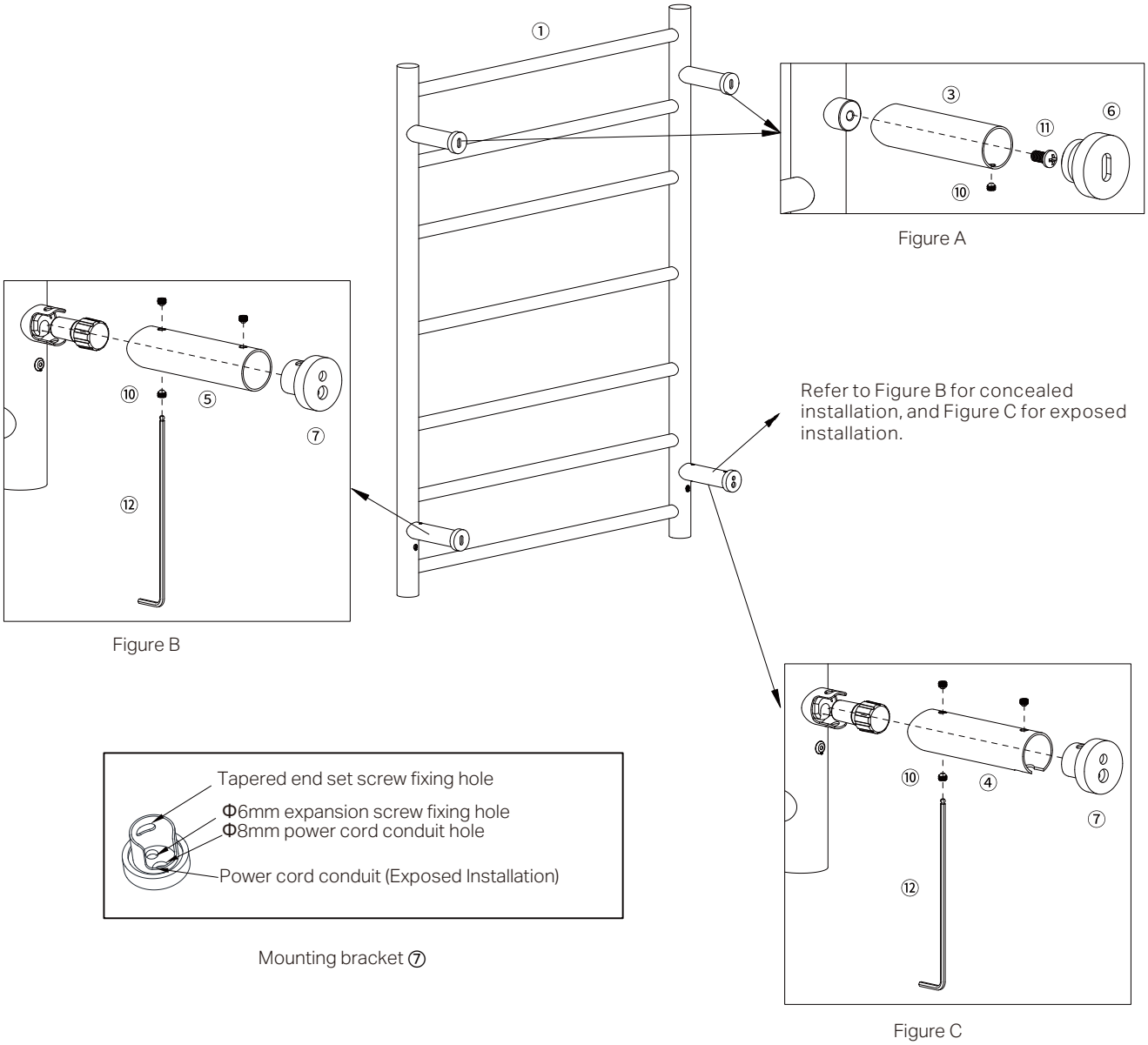

Step 01
Refer to Figure A for the installation of two upper support legs :
Assemble the ③ to the nut seat on the back of the ① with the ⑪, tap the ⑥ to the ② and secure it with the ⑩ .

For the two lower support legs of the towel rail:
- If going for concealed installation, refer to Figure B for both legs.
- If going for exposed installation, refer to Figure B for one leg and Figure C for the other.

Figure B: secure ⑤ onto the cylindrical fixing seat with a ⑩, and secure the ⑦ into the ⑤ with a ⑩ **.**

Figure C : Follow the same steps with concealed installation except replace ⑤ with ④.

Note:
- The towel ladder can be wired for power from either the left or right side at the bottom. During installation, we recommend connecting the power wiring on the side closer to the control box.
- This manual demonstrates the power wiring connection on the product's lower left side.

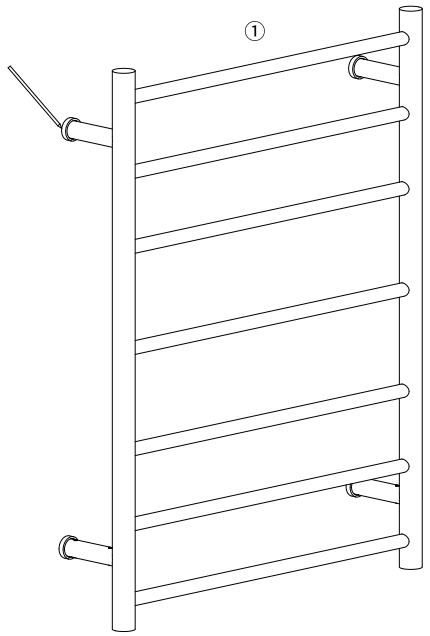

Step 02

Place the towel ladder ① squarely against the wall and draw the outline of the four bases individually with a wipeable marker to mark the mounting positions.

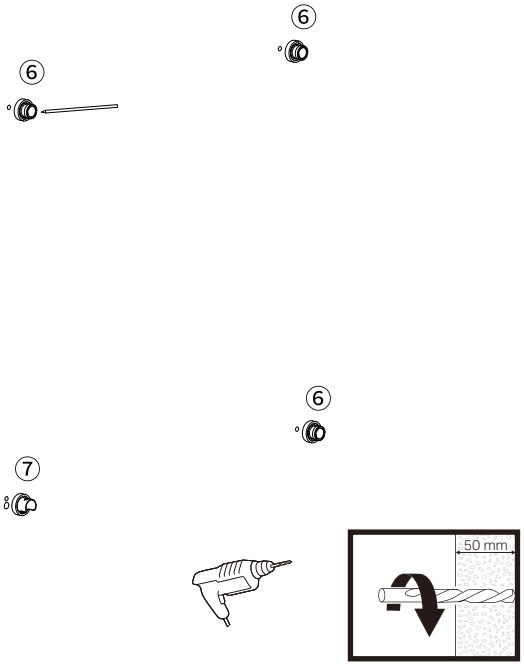

Step 03

Pull out the mounting brackets ⑥⑥⑦⑥ and align them sequentially with the outlines drawn on the wall perfectly.

For concealed installation: mark the drilling position of the expansion plug and passage hole of power cord.

For exposed installation: mark the drilling positions of the expansion screws only.

drill holes at the marked position with a Ø8mm drill bit. The recommended depth for the mounting hole is 50mm, while the passage hole should go through the wall for concealed installation.

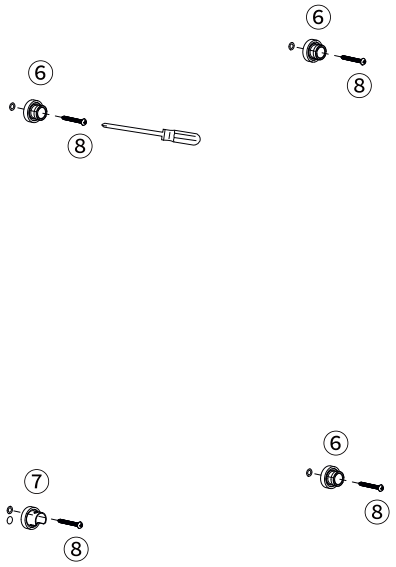

Step 04

Tap the expansion plugs into the mounting holes one by one until they are flush with the wall surface.

Secure the mounting brackets sequentially as shown in the diagram using expansion screws .

Note: The notch of mounting bracket ⑦ must align in the same direction as the notch of the ④ for exposed installation.

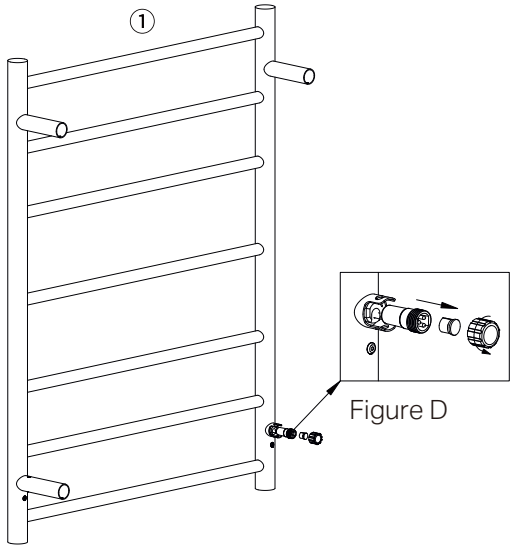

Step 05

Unscrew the male connector nut of the towel ladder where the wiring is needed (Figure D) and remove the protective plug.

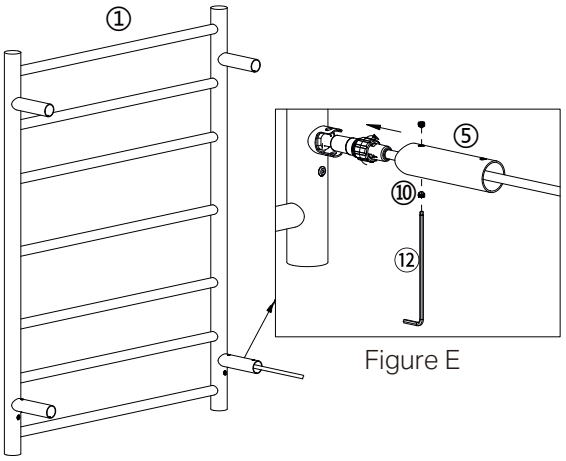

Figure E

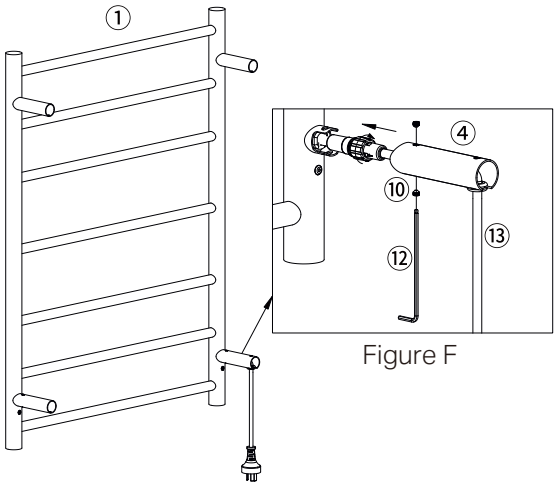

Figure F

Step 06
For concealed installation, refer to Figure E:
Unscrew the ⑩ and pull out the ⑤. Then, connect the female end of ⑭ to the male connector on the back of the towel ladder passing through ⑤, and connect the other end to the controller near the towel ladder passing through the power cord passage hole. Screw the male connector nut, and reinstall the ⑤ onto the towel ladder.
For exposed installation, refer to Figure F:
Follow the same steps as for concealed installation, except securing the cord loop at the notch of ④ and passing the power cord through the notch, instead of passing it through the passage hole in the wall.
Note: Do not perform this step with the power on!

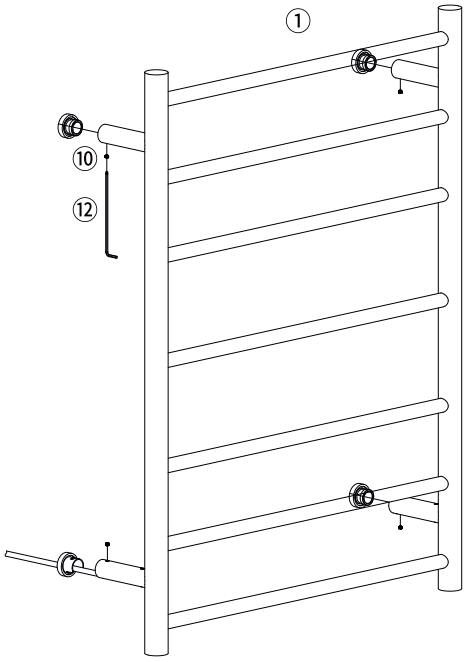

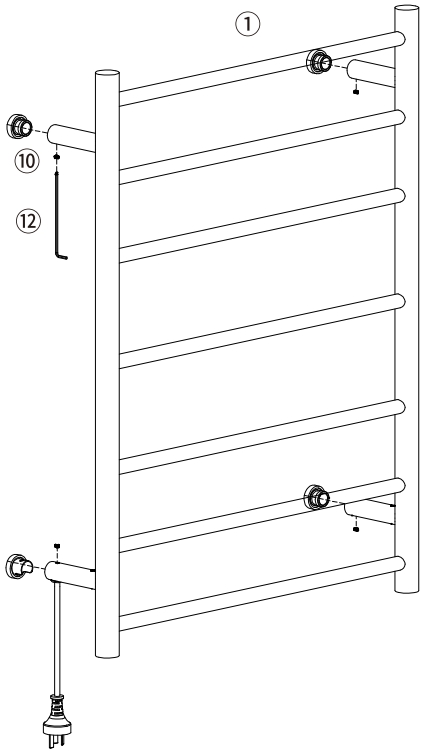

Step 07
Slide the towel ladder onto the wall-mounted bases, secure the towel ladder onto the bases with ⑩.
The heated towel ladder installation is now complete.

Nero

Nero

Warranty Policy