Mecca Care
25mm Grab Rail
300/450/600/900/1200mm

Nero

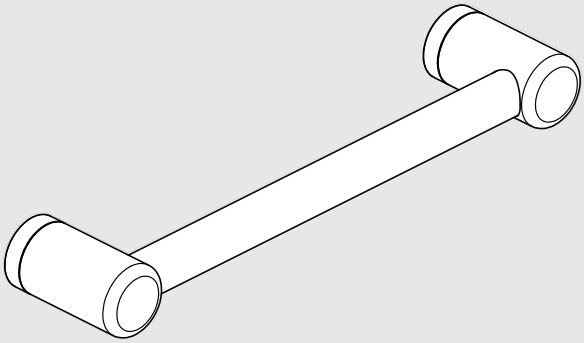

Versions:202506

Drawing

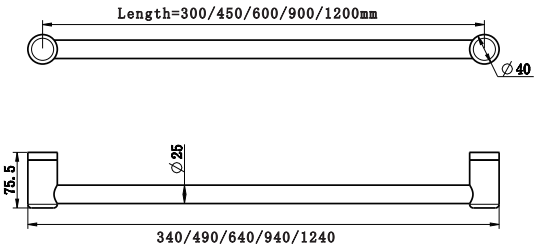

Specifications

SKU

300mm Length:NRCR2512
450mm Length:NRCR2518
600mm Length:NRCR2524
900mm Length:NRCR2530
12000mm Length:NRCR2548

Warning:

These rails are designed to be mounted onto wall studs or masonry walls. Installation is recommended to be completed by qualified trades person who complies with the AS 1428.1-2009 design for access and mobility standard. It is recommended rail location is determined by a qualified occupational therapist or trained professional to the AS 1428.1-2009 standard. Correct installation is required to ensure safe, long term operation. Incorrect mounting can result in reduced capacity of the rail which can result in injury to user and damage to the wall.

Features

1. Australian owned and designed.
2. Sizes: 300 -1200mm lengths as standard.
3. Modular design, the rail to be mounted horizontally, vertically or at any angle and cut down to suit your bathroom.
4. 150kg capacity for all 25mm and 32mm diameter grab rails.
5. 25mm diameter rails are suitable for heavy duty towel rails and smaller.
6. Gun metal, brushed gold and brushed bronze colours are PVD coated for long term durability.

Finish

Chrome
NRCR2512CH/NRCR2518CH
NRCR2524CH/NRCR2530CH
NRCR2548CH

Gun Metal
NRCR2512GM/NRCR2518GM
NRCR2524GM/NRCR2530GM
NRCR2548GM

Brushed Bronze
NRCR2512BZ/NRCR2518BZ
NRCR2524BZ/NRCR2530BZ
NRCR2548BZ

Matte Black
NRCR2512MB/NRCR2518MB
NRCR2524MB/NRCR2530MB
NRCR2548MB

Brushed Gold
NRCR2512BG/NRCR2518BG
NRCR2524BG/NRCR2530BG
NRCR2548BG

Brushed Nickel
NRCR2512BN/NRCR2518BN
NRCR2524BN/NRCR2530BN
NRCR2548BN

*Dimensions are nominal measurements only.

Installation Instruction

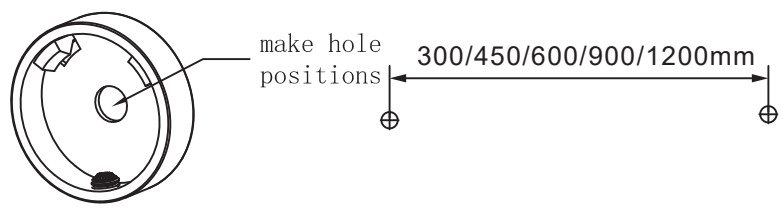	1. Locate wall studs, install into at least one stud. Place wall seal/mounting bracket on wall at correct height over centre of stud and mark hole positions on wall.
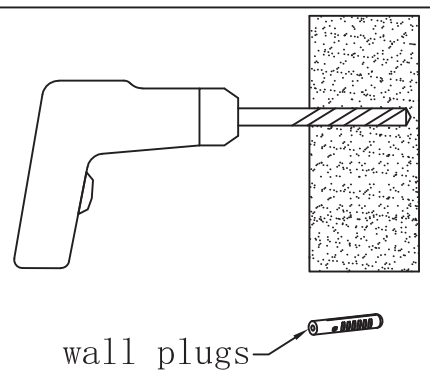	2. Drill pilot holes into wall stud approximately 60mm deep to suit mounting screws (and wall plugs if required). Tip:4mm hole for screws into timber or 10mm hole for wall plugs.
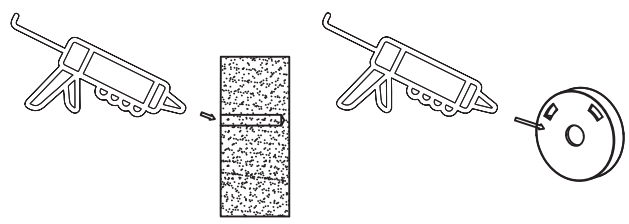	3. Apply small amount of silicon to mounting bracket and wall in and around the screw holes.
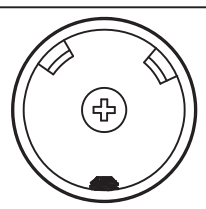	4. Install mounting brackets by screwing onto wall. Tip: Use appropriate mounting screws for the wall stud material, supplied screws are for timber wall studs.
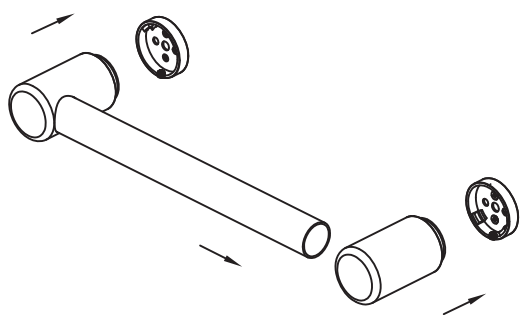	5. Slide rail tube into end bracket and push onto wall brackets. Tip: Rail length can be cut down to a smaller size, simply use an angle grinder, hacksaw or pipe cutter then deburr the end with a file or grinder and reinsert into the end bracket.
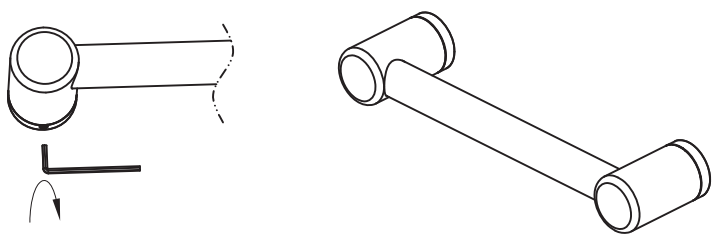	6. Tighten grub screws with Allen key. Tip: If rail rattles, loosen end bracket, twist slightly and tighten.

Nero

MECCA CARE
ASSISTED LIVING 25MM

Warranty Policy