Mecca Shower Mixer With Diverter

Nero

Lead Free

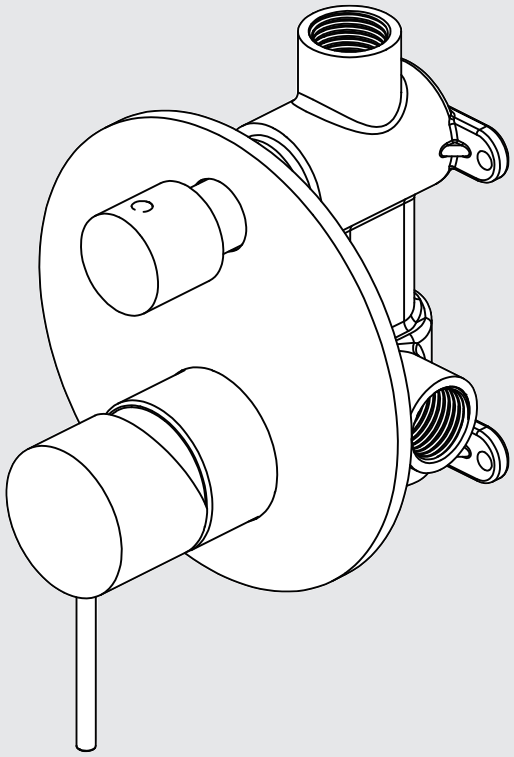

Versions:202506

Drawing

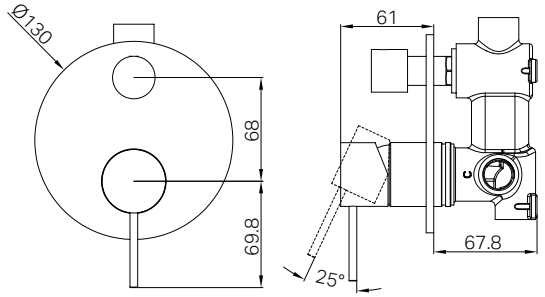

Specifications

Watermark License
WM-060073

Temperature Rating
Min 1˚C-Max 75˚C

Pressure Rating
Min 150kpa - Max 500kpa

Group Item

1x Universal Body
1x Trim Kits Only

Finish & SKU

Chrome NR221911aCH	Gun Metal NR221911aGM	Brushed Bronze NR221911aBZ	Brushed Nickel NR221911aBN
Matte Black NR221911aMB	Brushed Gold NR221911aBG	Matte White NR221911aMW	

*Dimensions are nominal measurements only.

Installation Instruction For Body Only

GENERAL INSTRUCTIONS:

- This product must be installed by a licensed plumber. Ensure that your plumbing installation conforms to the Australian/New Zealand Standard AS/NZS 3500.
- All pipework must be thoroughly flushed prior to the installation of the mixer. In-line filters must be fitted on both hot and cold supplies to prevent foreign particles from damaging the ceramic cartridge.
- All outlets used primarily for personal hygiene must deliver water at a safe temperature in accordance with regional regulations.

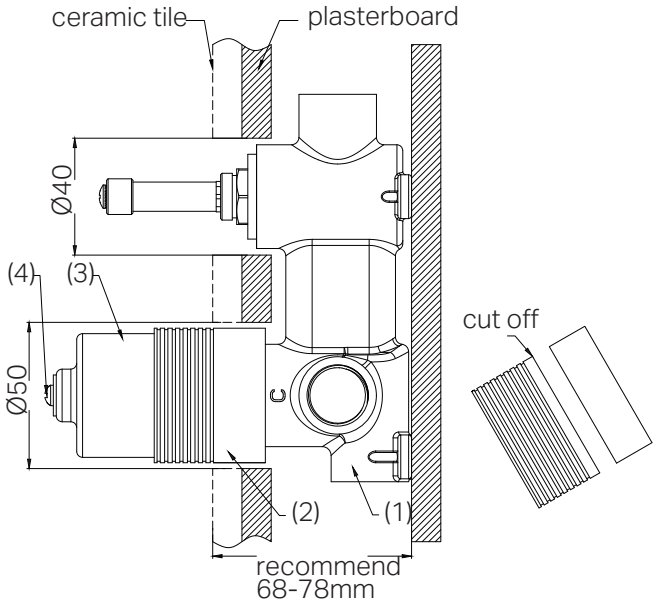

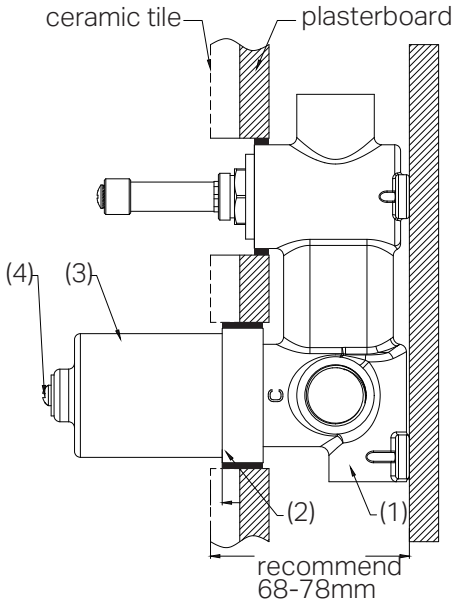

1. Secure the mixer body (1) to the nogging, ensuring an installation depth is 68-78mm from the nogging to ceramic tile.
Caution: Do not remove plastic sleeve (2) from the mixer body.
2.Connect the cold and hot water supply lines and perform a leak test.
3.Drill a φ50mm and a φ40mm hole in the plasterboard for mixer body, and then position plasterboard as shown in the above image.

4.When the installation depth is 68-70mm, make the plastic sleeve (2) 2-4mm from ceramic tile surface to body.
when the installation depth is 71-78mm,make the plastic sleeve (2) 4-7mm from ceramic tile surface to body.
Then waterproof the gap between the plasterboard and body.
5.Remove self-tapping screw, washer and plastic sleeve, and cut the plastic sleeve from the marked point.
6.Reattach self-tapping screw, washer and plastic sleeve.

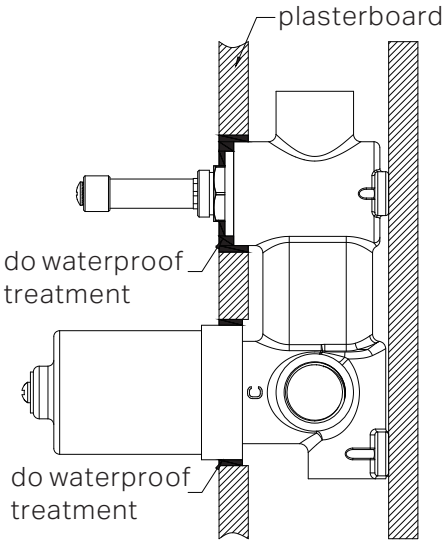

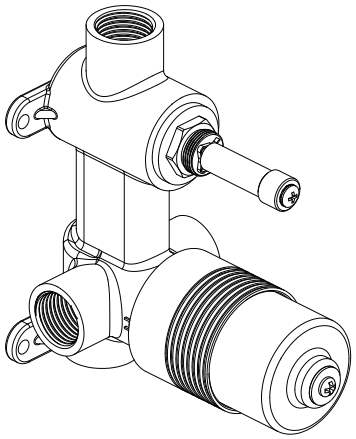

7.Waterproof for the gap the plasterboard and body.

Installation Instruction For Trim Kits Only

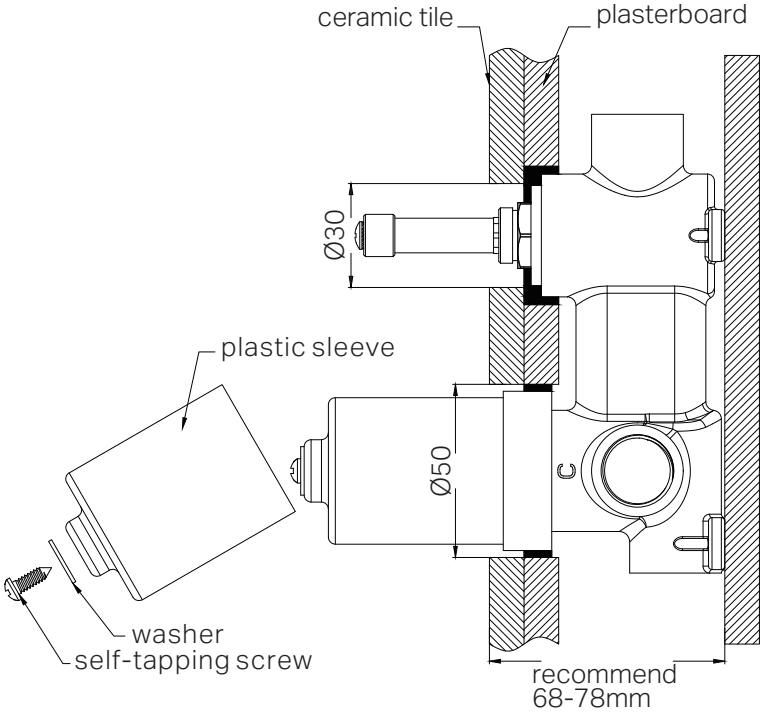

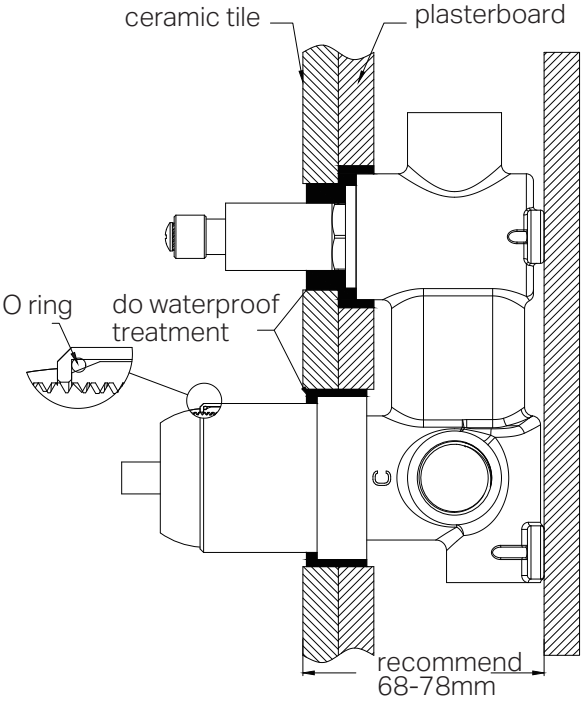

1.Drill a Ø50mm and a Ø30mm hole in the ceramic tile, then position it as shown in the above diagram.
2.Undo the self-tapping screw to remove the plastic sleeve.

3. Insert the O ring to the dressing bell groove, and slide the cartridge bell onto cartridge and slide Diverter dressing bell onto Diverter cartridge.
4.Apply waterproof treatment to the area indicated in the diagram above.
5. Tighten up the dressing ring on the cartridge bell.

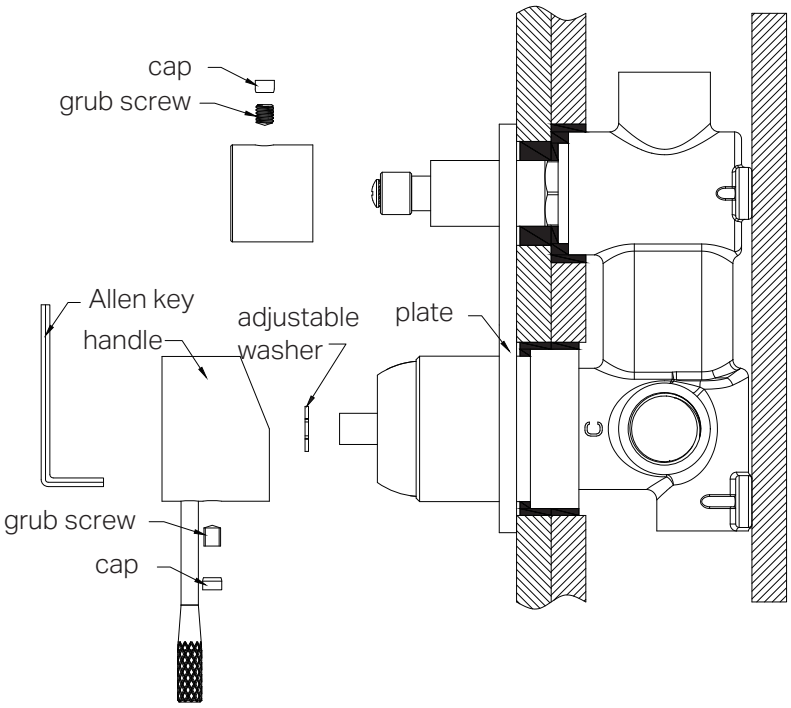

6.Slide the backplate onto body.
7.Attach the washer to cartridge rod, position the handle, tighten it with a grub screw using an Allen key, and cap the grub screw hole.
8.Put knob onto Diverter cartridge, tighten it with grub screw using Allen key, and cap the grub screw hole.

MAINTENANCE AND CARE:

- Regularly check the mixer and connections for signs of wear or leaks.
- Clean the tap with mild soapy water to maintain its appearance, avoiding harsh chemicals and abrasive materials that may damage the finish.

FINAL INSPECTION:

- Ensure the tap operates smoothly and that there are no leaks at the connections.
- Clean the area and the newly installed tap with a soft cloth to remove any installation residues.

Nero

Warranty Policy