Bianca Shower Mixer With Diverter Separate Back Plate Trim Kits Only

Nero

Lead Free

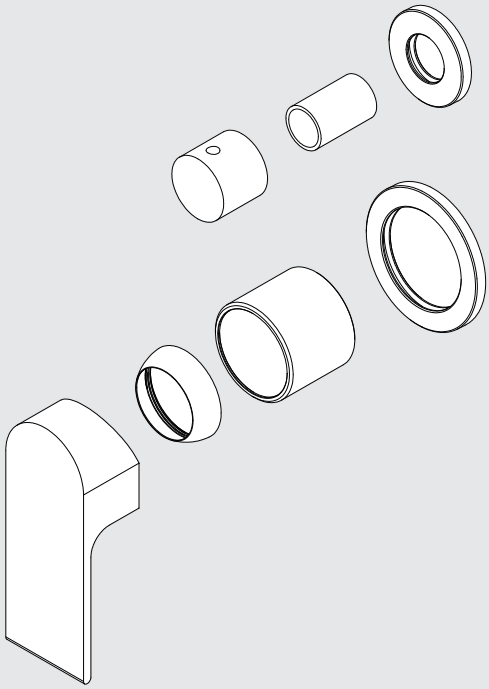

Versions:202506

Drawing

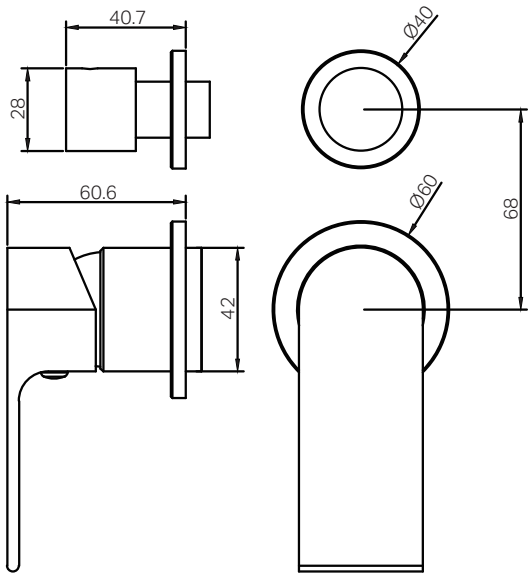

Specifications

Watermark License
WM-060073

Temperature Rating
Min 1˚C-Max 75˚C

Pressure Rating
Min 150kpa - Max 500kpa

Packaging Includes

2x Plates
1x Handle
1x Diverter Knob
1x Diverter Sleeve
1x Cartridge Bell
1x Dressing Ring
1x Installation Kits

Finish & SKU

Chrome NR321511gtCH	Gun Metal NR321511gtGM	Brushed Nickel NR321511gtBN
Matte Black NR321511gtMB	Brushed Gold NR321511gtBG	Brushed Bronze NR321511gtBZ

*Dimensions are nominal measurements only.

Installation Instruction

GENERAL INSTRUCTIONS:

- This product must be installed by a licensed plumber. Ensure that your plumbing installation conforms to the Australian/New Zealand Standard AS/NZS 3500.
- All pipework must be thoroughly flushed prior to the installation of the mixer. In-line filters must be fitted on both hot and cold supplies to prevent foreign particles from damaging the ceramic cartridge.
- All outlets used primarily for personal hygiene must deliver water at a safe temperature in accordance with regional regulations.

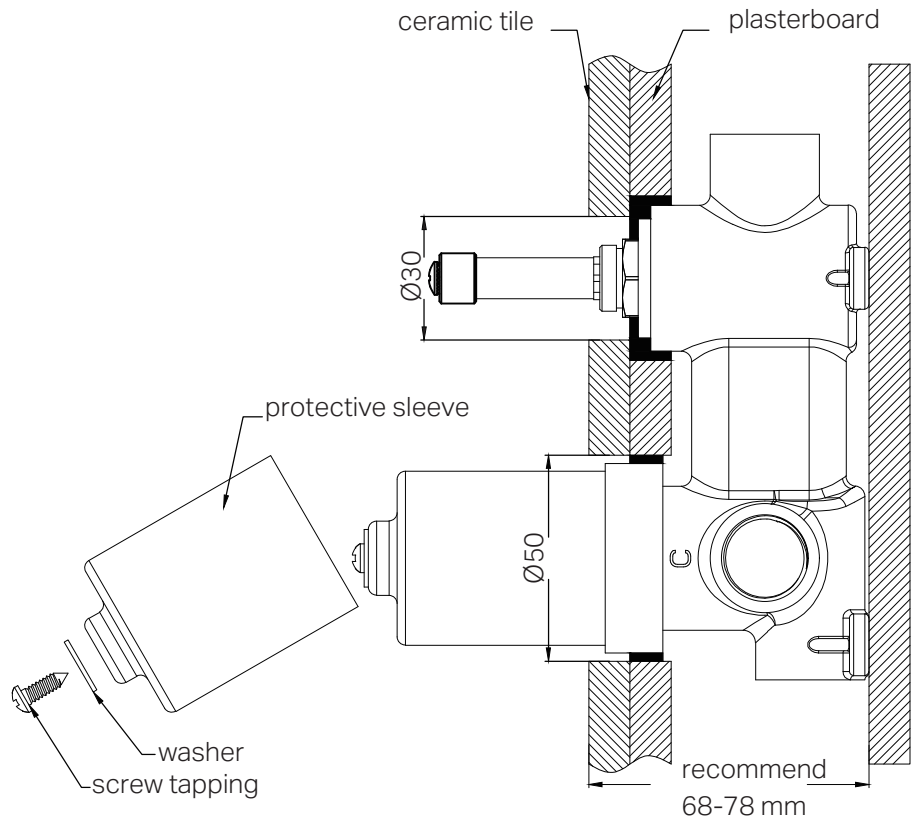

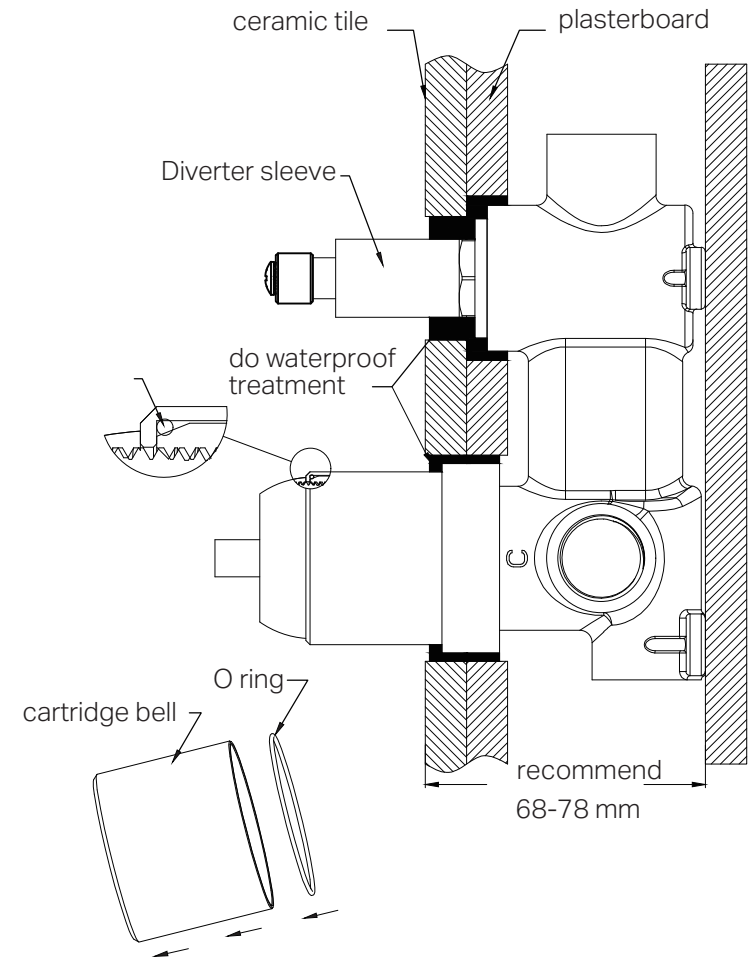

1. Drill a Ø50mm and a Ø30mm hole in the ceramic tile, then position it as shown in the above diagram.
2. Undo the self-tapping screw to remove the protective sleeve .

3. Insert the O ring to the cartridge bell groove, and slide the cartridge bell onto cartridge and slide Diverter sleeve onto Diverter cartridge.
4. Apply waterproof treatment to the area indicated in the diagram above.
5. Thread the dressing ring on the cartridge bell.

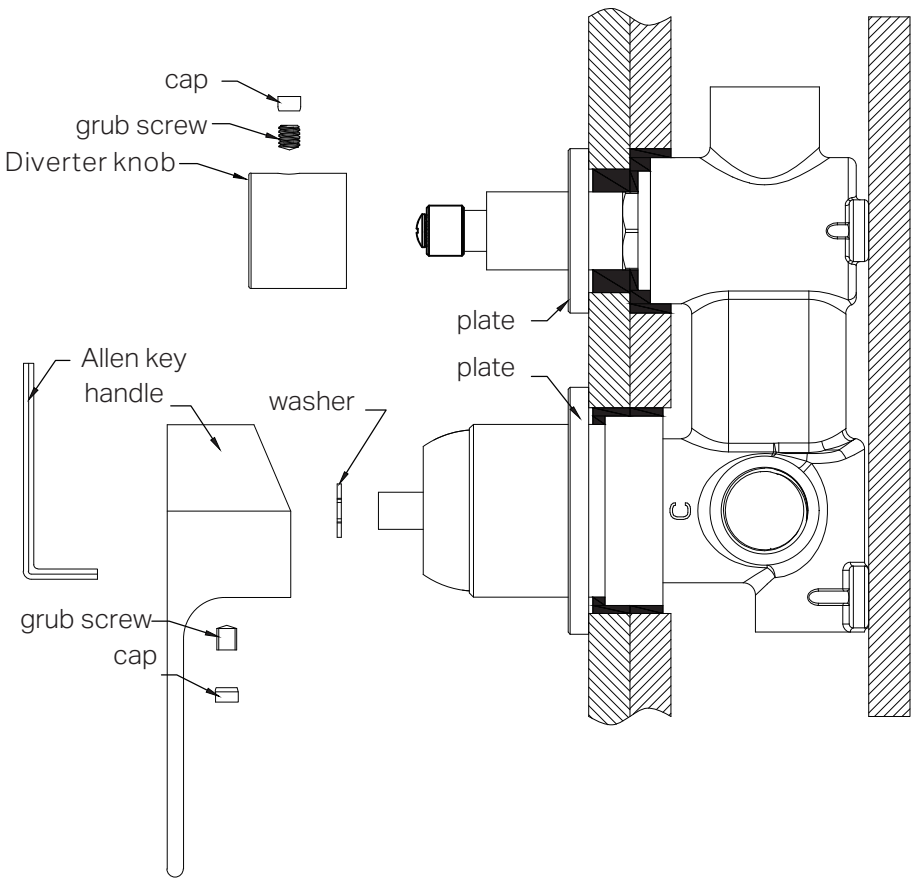

6. Slide the backplates onto body.
7. Attach the washer to cartridge rod, position the handle, tighten it with a grub screw using an Allen key, and cap the grub screw hole.
8. Attach the Diverter knob to Diverter cartridge, tighten it with grub screw using Allen key, and cap the grub screw hole.

MAINTENANCE AND CARE:

- Regularly check the mixer and connections for signs of wear or leaks.
- Clean the tap with mild soapy water to maintain its appearance, avoiding harsh chemicals and abrasive materials that may damage the finish.

FINAL INSPECTION:

- Ensure the tap operates smoothly and that there are no leaks at the connections.
- Clean the area and the newly installed tap with a soft cloth to remove any installation residues.

3170487

Nero

Warranty Policy