Mecca Care
Lever Basin Set
Arc Spout

Nero

Lead Free

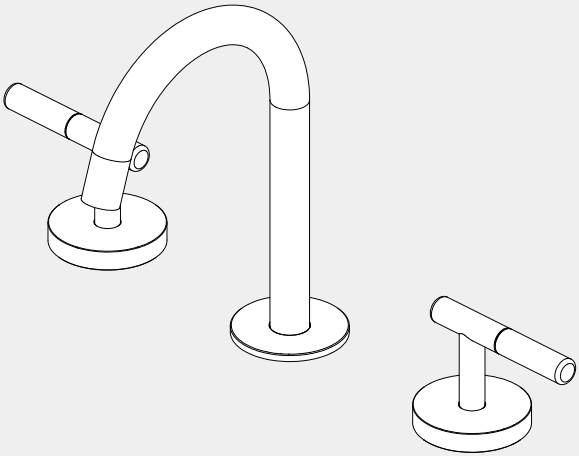

Version : 202606

Drawing

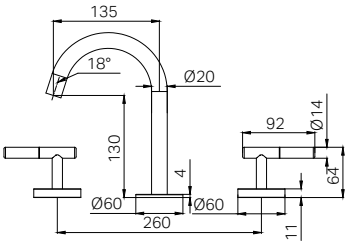

Specifications

Watermark License
WM-060073
Temperature Rating
Min 1 °C - Max 75 °C
Pressure Rating
Min 150kpa - Max 500kpa

Packing Includes

1x Basin Mixer Set
1x Installation Kits

Finish & SKU

- **Matte Black** 25D025MB
- **Brushed Nickel** 25D025BN
- **Gun Metal** 25D025GM
- **Brushed Gold** 25D025BG
- **Brushed Bronze** 25D025BZ

*Dimensions are nominal measurements only.

INSTALLATION INSTRUCTIONS

GENERAL INSTRUCTIONS:

- This product must be installed by a licensed plumber. Ensure that the installation complies with the Australian/New Zealand Standard AS/NZS 3500.
- All pipework must be thoroughly flushed prior to the installation of the mixer. In-line filters must be fitted on both hot and cold supplies to prevent foreign particles from damaging the ceramic cartridge.
- All outlets used primarily for personal hygiene must deliver water at a safe temperature in accordance with regional regulations.

NOTE:

- Do not hydrostatic test the installation with this mixer installed. Damage to the ceramic cartridge may occur.
- Do not remove the ceramic cartridge from the mixer when installing.
- After installation, all connections must be checked for leaks.
- This mixer is not recommended for use in uncontrolled heating systems such as wet-backs or solar heating units unless a suitable tempering valve is fitted.
- If limited water flow is experienced, locate aerator and filter washers and clean away foreign material as required.
- It is the responsibility of the plumber to ensure a waterproof seal is achieved between the product and mounting surface. If in doubt about the quality of the seal, remove the product and reinstall.

PARTS NAME

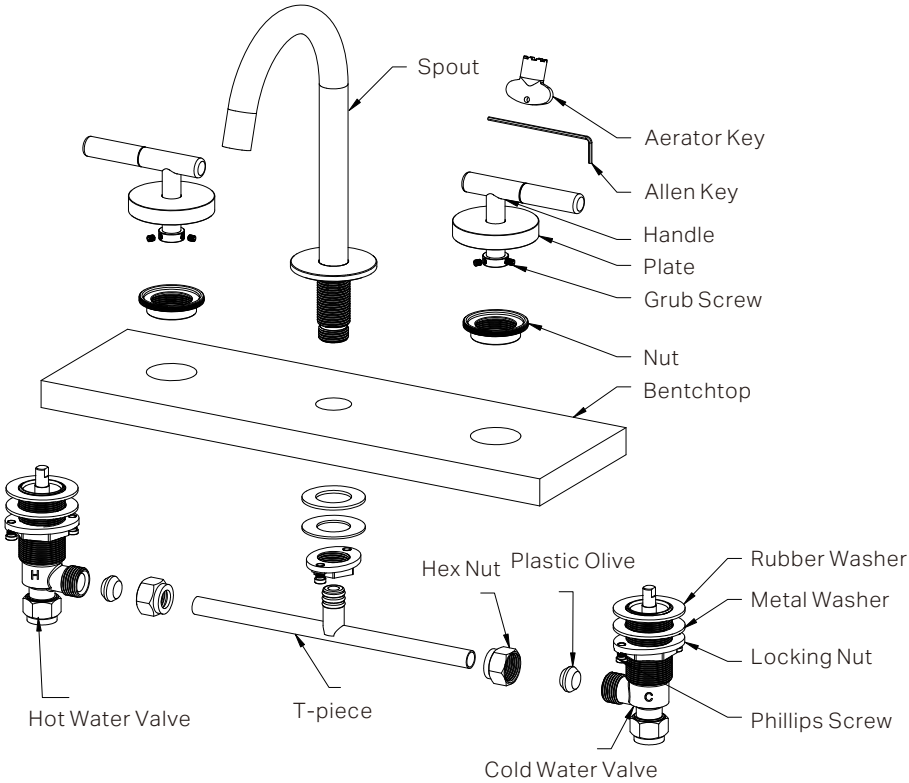
Spout
Aerator Key
Allen Key
Handle
Plate
Grub Screw
Nut
Bentchtop
Hex Nut
Plastic Olive
Rubber Washer
Metal Washer
Locking Nut
Phillips Screw
Hot Water Valve
T-piece
Cold Water Valve

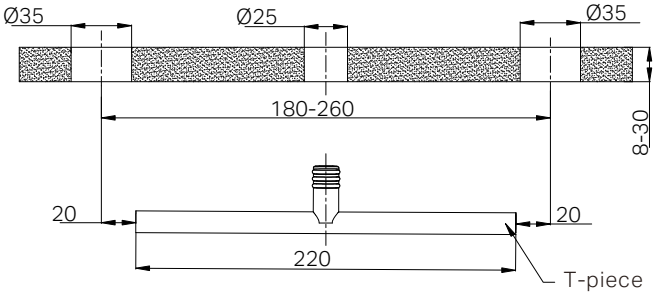
Ø35
Ø25
Ø35
180-260
8-30
20
20
220
T-piece

INSTALLATION STEPS

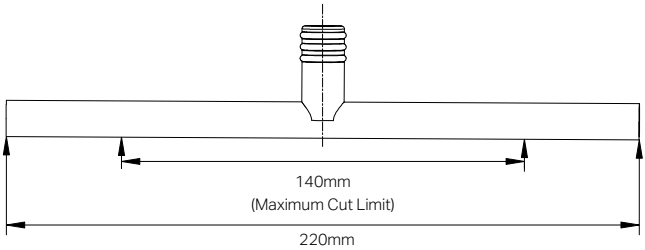

1. Cut three holes on the benchtop as shown in the diagram:
Two Ø35 mm holes for the hot and cold valve bodies.
One Ø25 mm hole in the centre for the spout.
Note:
1. Ensure equal spacing between left and right sides. If required, the T-Piece length may be trimmed equally on both ends to suit the hole distance.
2. Ensure that the benchtop thickness is within the range of 8–30 mm.

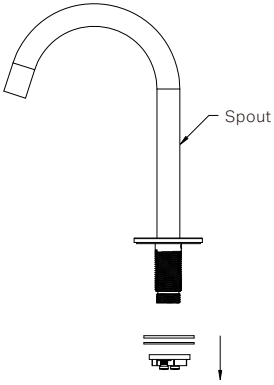

2. Remove the locking nut, metal washer, and rubber washer from the spout.

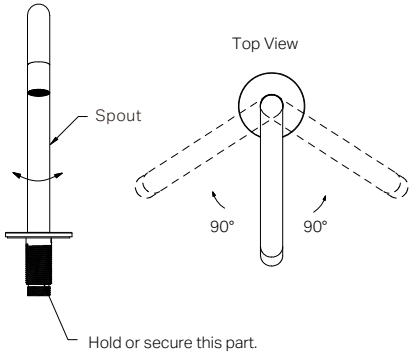

3. Rotate the spout to find the midpoint of its 180° swivel range.

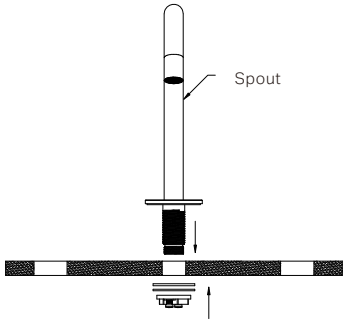

4. Insert the adjusted spout into the centre hole.
Reattach the rubber washer, metal washer and locking nut underneath the benchtop.
Tighten the locking nut first, then further secure the spout with the Phillips screws, ensuring the spout is firmly secured.

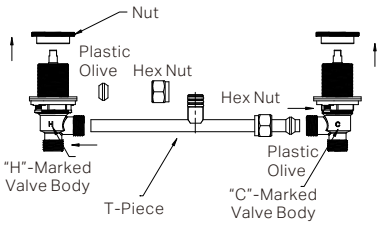

5. Identify the hot(H) and cold(C) valve body.
Unscrew the nuts on the top, and hex nuts, plastic olives on the sides from valve bodies.
Fit the plastic olive and hex nut onto the T-piece on both sides, slightly tighten the hex nuts. Do not overtighten to allow for later alignment.

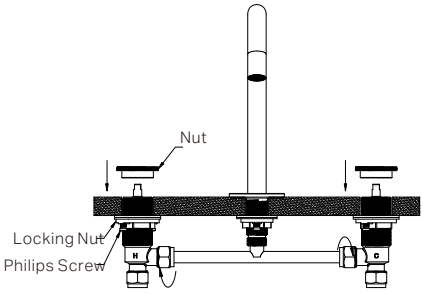

6. Push-fit the T-piece into the spout, and align the valves with the two mounting holes.
Ensuring the boy sets sit flush.
Hand-tighten the nuts onto both valve bodies.
Secure the body sets with locking nuts, then further secure them with Philips screws.
Tighten the hex nuts on both ends of the T-piece to prevent leaks.

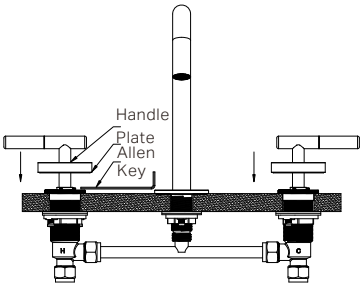

7. Slide the plates up and fit the handles onto the spindles.
Tighten the grub screws with an Allen Key.

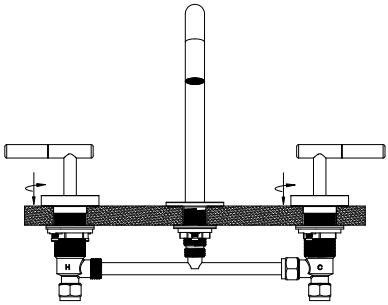

8. Slide the plates down to cover the fittings and tighten them in place.

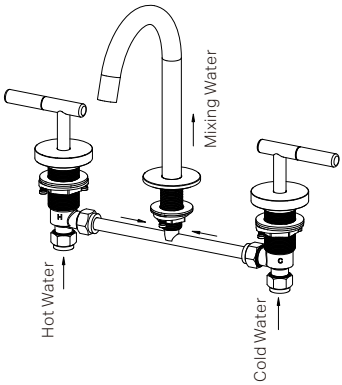

9. Turn on the water supply and check all connections for leaks.

FINAL INSPECTION:

- Ensure the tap operates smoothly and that there are no leaks at the connections.
- Clean the area and the newly installed tap with a soft cloth to remove any installation residues.

MAINTENANCE AND CARE:

- Regularly check the mixer and connections for signs of wear or leaks.
- Clean the tap with mild soapy water to maintain its appearance, avoiding harsh chemicals and abrasive materials that may damage the finish.
- Avoid contact with highly pigmented substances such as red wine, coffee and ink, as they may cause permanent staining.

3171125

Nero

Warranty Policy