Serenity Shower System with Spout Body Only

Nero

Lead Free

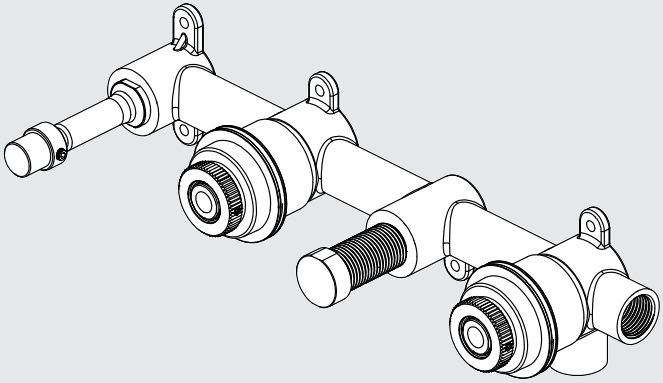

Versions:202506

Drawing

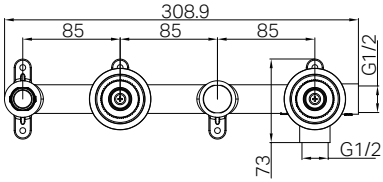

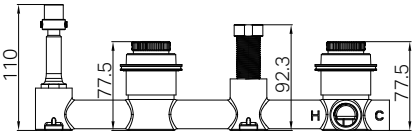

Specifications

SKU
24C023

Watermark License
WM-060073

Temperature Rating
Min 1˚C-Max 75˚C

Pressure Rating
Min 150kpa - Max 500kpa

Packaging Includes

1x Mixer Body

*Dimensions are nominal measurements only.

Installation Instruction

GENERAL INSTRUCTIONS:

- This product must be installed by a licensed plumber. Ensure that the installation complies with the Australian/New Zealand Standard AS/NZS 3500.
- All pipework must be thoroughly flushed prior to the installation of the mixer. In-line filters must be fitted on both hot and cold supplies to prevent foreign particles from damaging the ceramic cartridge.
- All outlets used primarily for personal hygiene must deliver water at a safe temperature in accordance with regional regulations.

NOTE:

- Do not hydrostatic test the installation with this mixer installed. Damage to the ceramic cartridge may occur.
- Do not remove the ceramic cartridge from the mixer when installing.
- After installation, all connections must be checked for leaks.
- This mixer is not recommended for use in uncontrolled heating systems such as wet-backs or solar heating units unless a suitable tempering valve is fitted.
- If limited water flow is experienced, locate aerator and filter washers and clean away foreign material as required.
- It is the responsibility of the plumber to ensure a waterproof seal is achieved between the product and mounting surface. If in doubt about the quality of the seal, remove the product and reinstall.
- The marble stone hand wheel crafted from natural marble. Each handle boasts unique variations in color, veining, and texture, making every piece one of a kind.

MAINTENANCE AND CARE:

- Regularly check the mixer and connections for signs of wear or leaks.
- Clean the tap with mild soapy water to maintain its appearance, avoiding harsh chemicals and abrasive materials that may damage the finish.
- Avoid contact with highly pigmented substances such as red wine, coffee and ink, as they may cause permanent staining.

FINAL INSPECTION:

- Ensure the tap operates smoothly and that there are no leaks at the connections.
- Clean the area and the newly installed tap with a soft cloth to remove any installation residues.

Installation Instruction For Body Only

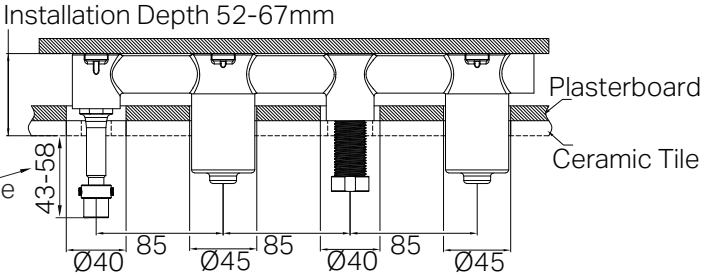

Caution: Please ensure the distance from the water testing plug surface to the tile surface is within the range of 43-58mm.

1. Position the mixer body against the nogging and secure it firmly. Ensure the installation depth is 52-67mm from the nogging to the ceramic tile.
2. Connect the cold and hot water supply lines and perform a leak test.
3. Drill two Ø45mm and two Ø40mm holes in the plasterboard as shown in the diagram.

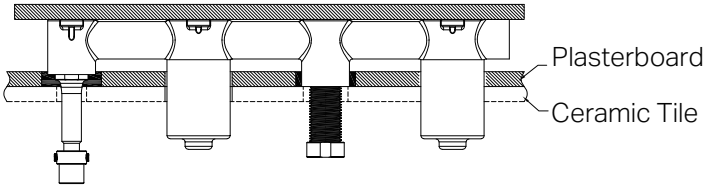

4. Install plasterboard and waterproof the gap between the mixer body and plasterboard.

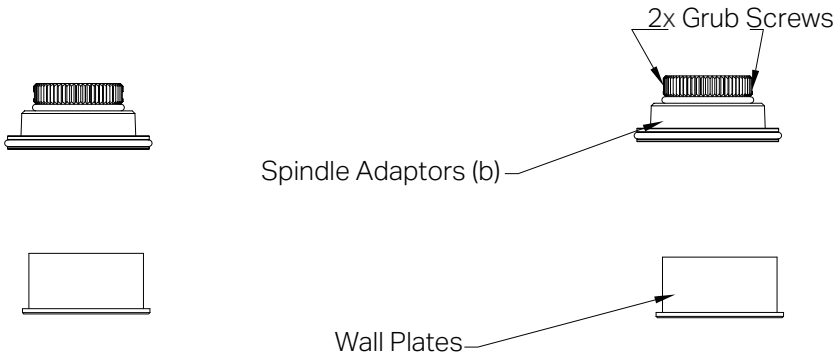

Note: The mixer body package includes two wall plates and two spindle adaptors (b), which are designed to be installed during the installation of the trim kits. The each spindle adaptor (b) is equipped with two grub screws to ensure proper alignment and a secure fit.

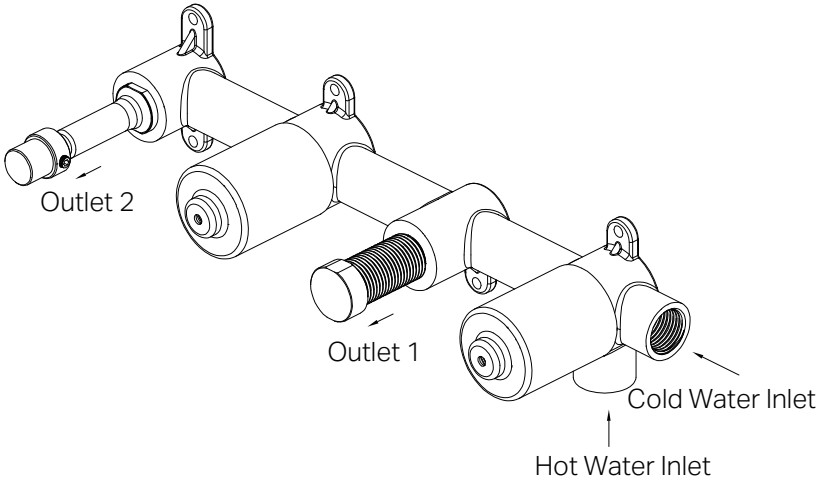

Installation Instruction
For Trim Kits Only

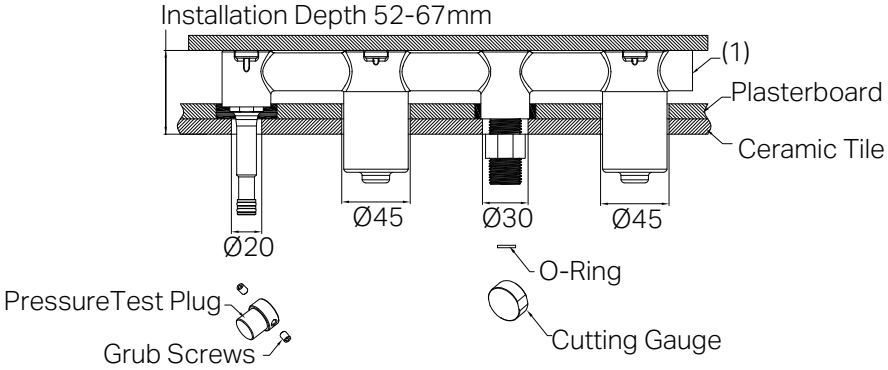

1. Drill two Ø45mm, a Ø30mm and a Ø20mm holes in the ceramic tile, then position it as shown in the diagram.
2. Release the grub screws to remove the water testing plug, and remove the other pressure test plug and the O-ring.
3. Attach the cutting gauge to the G1/2 outlet, and trim any excess thread.

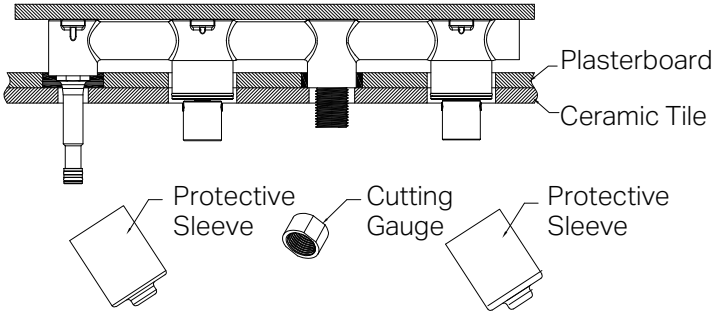

4. Remove the two protective sleeves and the cutting gauge.

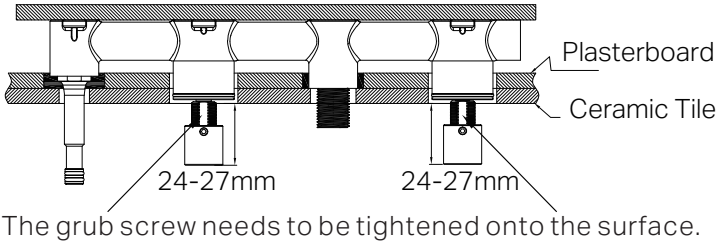

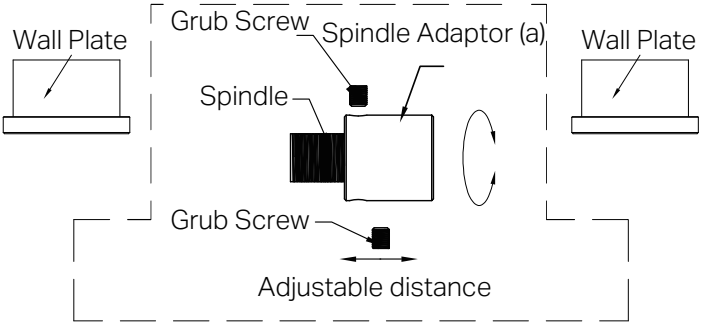

5. Adjust the two spindle adaptor (a) to the optimal length, ensuring a distance of 24-27 mm from the tile surface, as shown in the diagram.
6. Loosen the grub screws to make the adjustment.
Install each wall plates securely onto the mixer body.

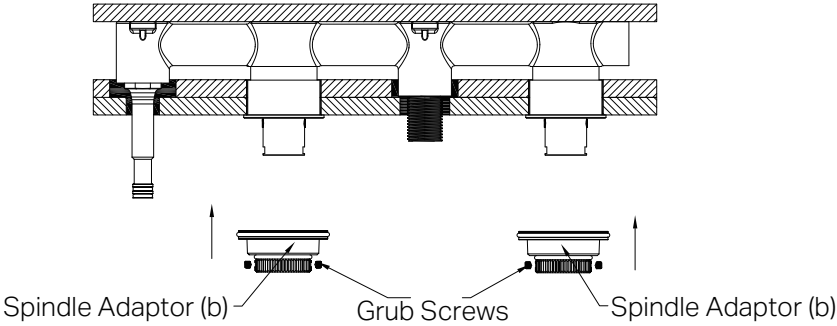

7. Use silicone sealant to seal the gap between the tile, water outlet, wall plates and the G1/2 outlet.
8. Attach the two spindle adaptors (b) to the two spindle adaptors (a) and tighten the grub screws firmly to secure it.

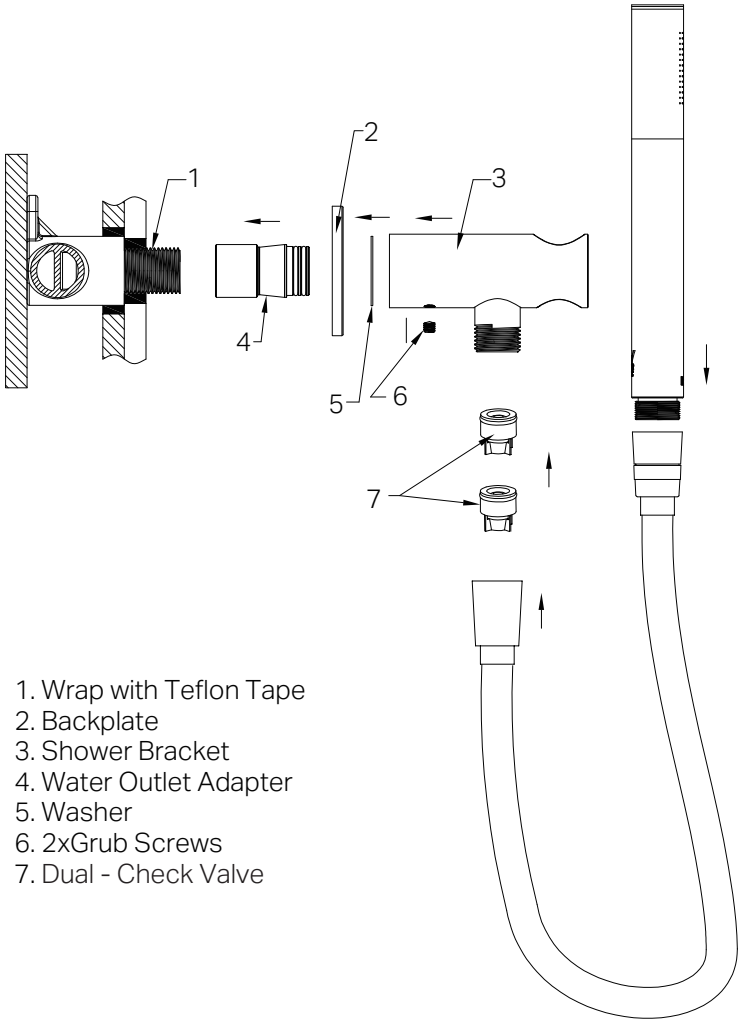

1. Wrap with Teflon Tape
2. Backplate
3. Shower Bracket
4. Water Outlet Adapter
5. Washer
6. 2xGrub Screws
7. Dual - Check Valve

9.Thread the water outlet adapter onto the G1/2 outlet and seal with Teflon tape.
10. Assemble the backplate, washer, and shower bracket onto the G1/2 outlet, then secure with two grub screws.
Note: Dual-check valve are pre-installed in the shower bracket.
11. Attach the shower hose to hand shower and shower bracket.

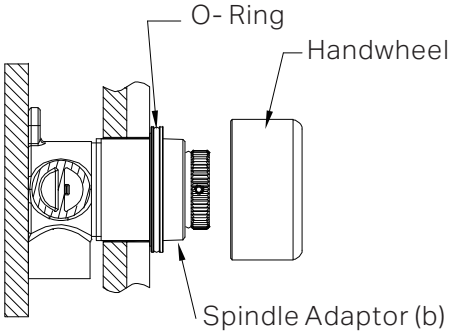

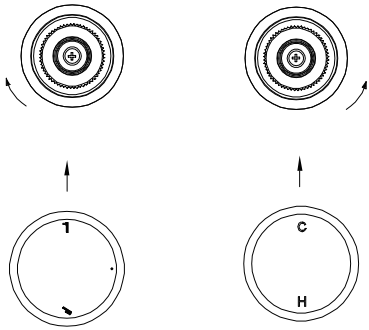

12. Apply lubrication evenly to the O-Ring. Refer to the diagram to identify the correct O-Ring position. Ensure the O-Ring is well-lubricated to prevent damage during installation.
For Metal Handwheels:
Rotate the right spindle adaptor (b) counterclockwise to its fully closed position.
Rotate the left spindle adaptor (b) clockwise to its fully closed position.
Refer to the diagram for clarification.
For Marble Handwheels:
No adjustment to the spindle adaptor (b) is necessary.
Align the Handwheels with the spindle adaptor (b):
Ensure the spline on the underside of the handwheels align perfectly with the gears on the spindle adaptor (b), as shown in the above diagram.
This alignment is crucial for proper functionality.
Secure the Handwheels:
Once aligned, press the handwheels down firmly onto the spindle adaptor (b).
Tip:
For metal handwheels, ensure the handwheels installed as shown in above on the diagram.

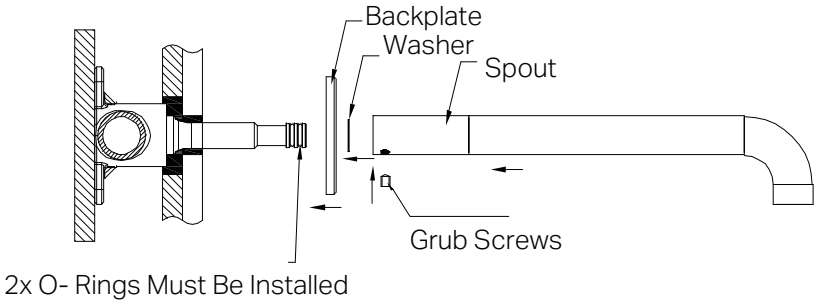

13. Ensure the spout is aligned and secure it firmly using the supplied two grub screws and ensure that O-rings are properly seated.

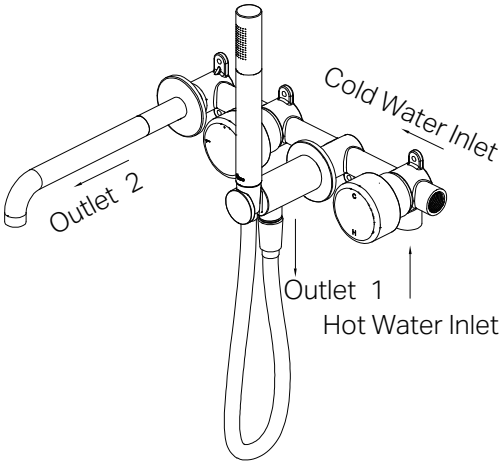

14. Turn on the drainage system and water supply, and inspect all connections for any signs of leakage.
Note: If you bought marble handwheel product, there are no hot/cold markings are applied to the handwheels.

3170852

Nero

Warranty Policy