Opal Progressive Shower Mixer

Nero

Lead Free

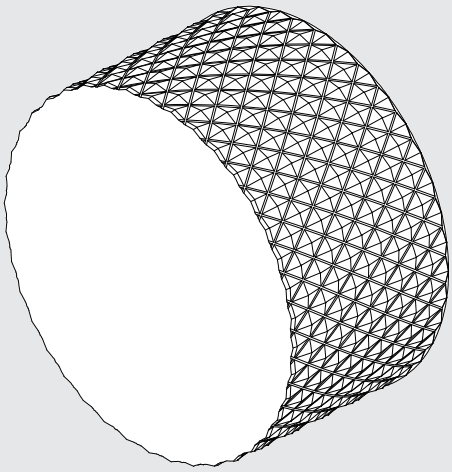

Versions:202506

Top/Back

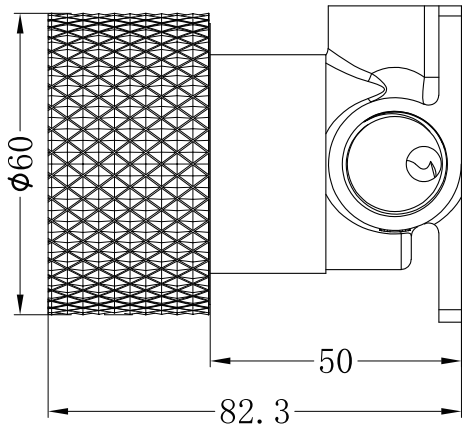

Specifications

SKU
NR252009

Watermark License
WM-060073

Temperature Rating
Min 1˚C-Max 75˚C

Pressure Rating
Min 150kpa - Max 500kpa

Packaging Includes

1x hand wheel
1x body
1x install kits

Finish

Brushed Bronze
NR252009BZ

Graphite
NR252009GR

Brushed Gold
NR252009BG

Brushed Nickel
NR252009BN

*Dimensions are nominal measurements only.

Installation Instruction For Body

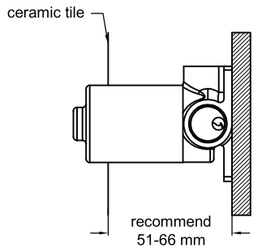

1. Fix body on nogging and ensure installation depth is 51-66mm from nogging to ceramic tile.

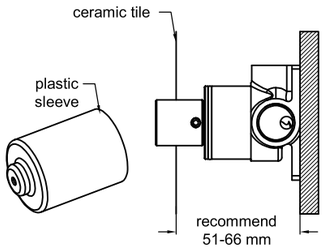

2.Take off plastic sleeve.

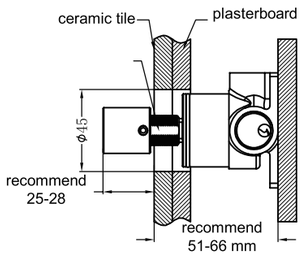

3.Adjust connecting rod and ensure depth is 25-28mm from the front of adaptor to ceramic tile.
Drill a ϕ45 hole on plasterboard and ceramic tile for the body, according to above picture. Then install plasterboard and do waterproof for the whole plasterboard. Install ceramic tile.

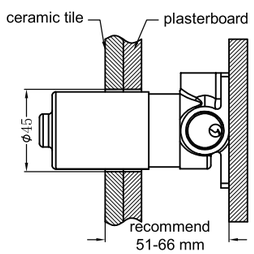

4.Install plastic sleeve back to the body.

Installation Instruction For Trim Kits

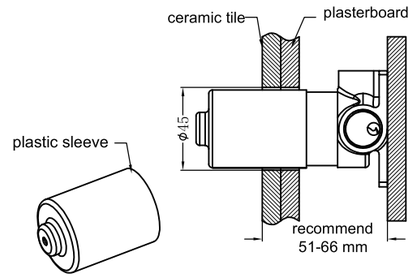

1. Remove plastic sleeve.

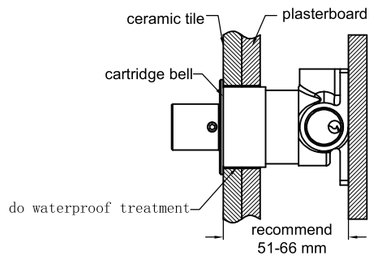

2.Put cartridge bell onto body and do waterproof treatment for the gap between cartridge bell and plasterboard and ceramic tile.

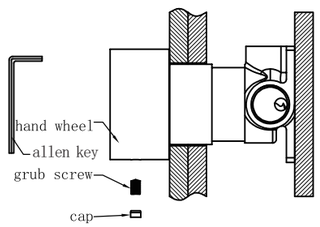

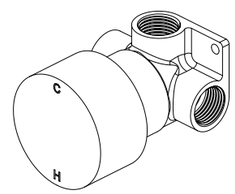

3. Make hand wheel into connecting rod, turn the hand wheel counterclockwise to the end. Then reinstall the hand wheel, make the "C" should be on twelve o'clock direction and "H" on the six o'clock direction, according to above picture. Then tighten grub screw of hand wheel by allen key, put cap into hand wheel.

Nero

Warranty Policy